WATERPROOF CONNECTORS (with) CABLE ASSEMBLY

-RJ Modular Jack

-USB

-Circular M Connectors

INDEX

PANSTRONG

Waterproof RJ45 and USB Connector:

Screw locking system:

3352 series 1-16

3354 series 17-18

3356 series, metal 19-24

Quick locking system:

3351 series 25-30

3353 series, metal 31-38

Waterproof M connector

M12 Panel side:

4001 Rear Mount 39-41

4002 Front Mount 42-47

M12 Cable side:

4006 48-54

4001 (Cap) 55

M8 Panel side:

4012 56-59

M8 Cable side:

4016 60-63

4012(Cap) 64

Cable Gland (IP68)

4301 Series 65

Vent Plug (IP68)

4380 Series 66

Waterproof RJ45 Without Sealed Jack With Cable and Plug (IP 69K)

PANSTRONG

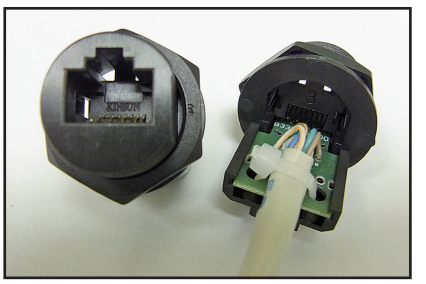

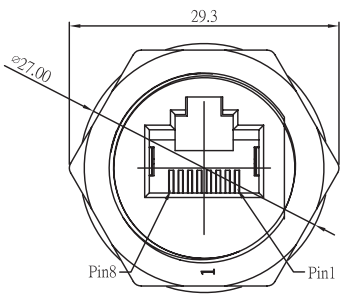

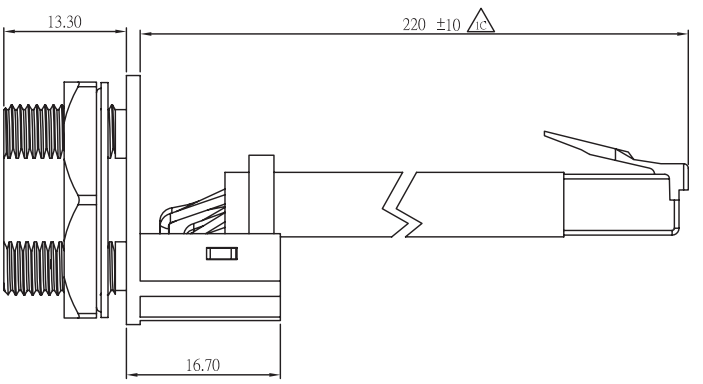

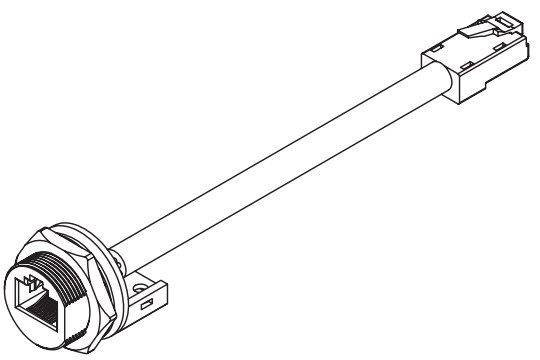

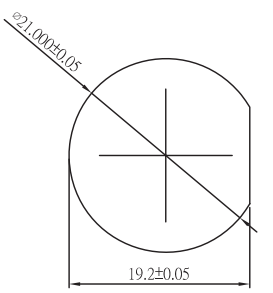

Panel Cut-Out

Materials

- **Plastic Housing** : Engineering Thermoplastic. Flammability Rating UL 94V-0.
- **Contacts** : Phosphor Bronze.
- **Plating** : Gold Plating Over Nickel In Contact.
- **Nut** : Engineering Thermoplastic Flammbility Rating UL 94V-0
- **Gasket** : Silicone
- **Panel Thick** : 1.5~4.5mm
- **RJ45 Plug Housing** : PC
- **RJ45 Plug Contacts** : Phospher Bronze, finis : Gold over Nickel
- **Cable** : Cat 5e

PASS PASS PASS PASS PASS PASS PASS PASS RoHS

Ordering Information

3352D01010

Waterproof RJ45 Sealed Jack With Cable and Plug (IP 69K)

PANSTRONG

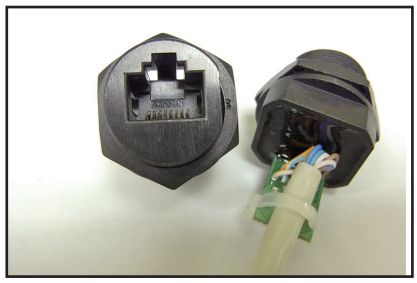

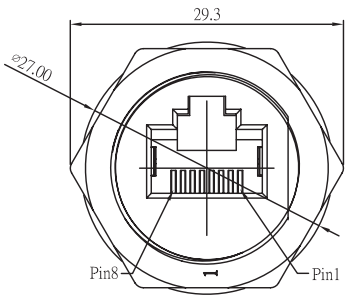

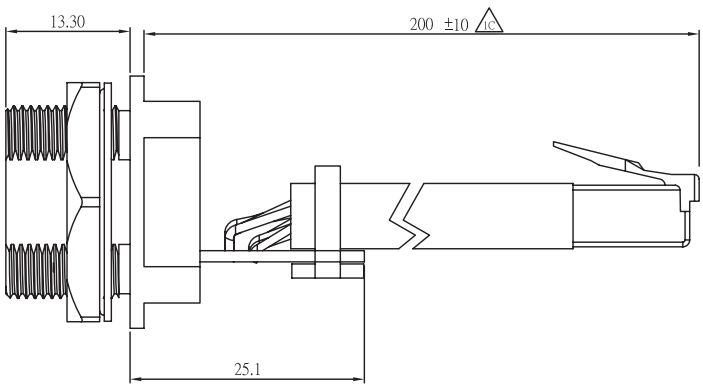

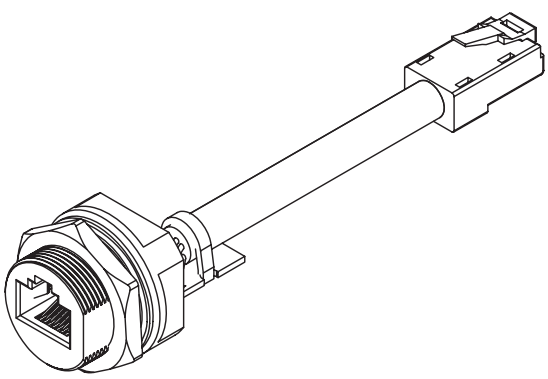

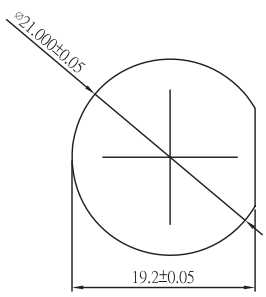

Panel Cut-Out

Materials

- **Plastic Housing** : Engineering Thermoplastic. Flammability Rating UL 94V-0.
- **Contacts** : Phosphor Bronze.
- **Plating** : Gold Plating Over Nickel In Contact.
- **Nut** : Engineering Thermoplastic Flammbility Rating UL 94V-0
- **Gasket** : Silicone
- **Panel Thick** : 1.5~4.5mm
- **RJ45 Plug Housing** : PC
- **RJ45 Plug Contacts** : Phospher Bronze, finis : Gold over Nickel
- **Cable** : Cat 5e

PASS PASS PASS PASS PASS PASS PASS PASS RoHS

Ordering Information

3352D01410

Waterproof RJ45 Sealed Jack With Wire Harness (IP 69K)

PANSTRONG

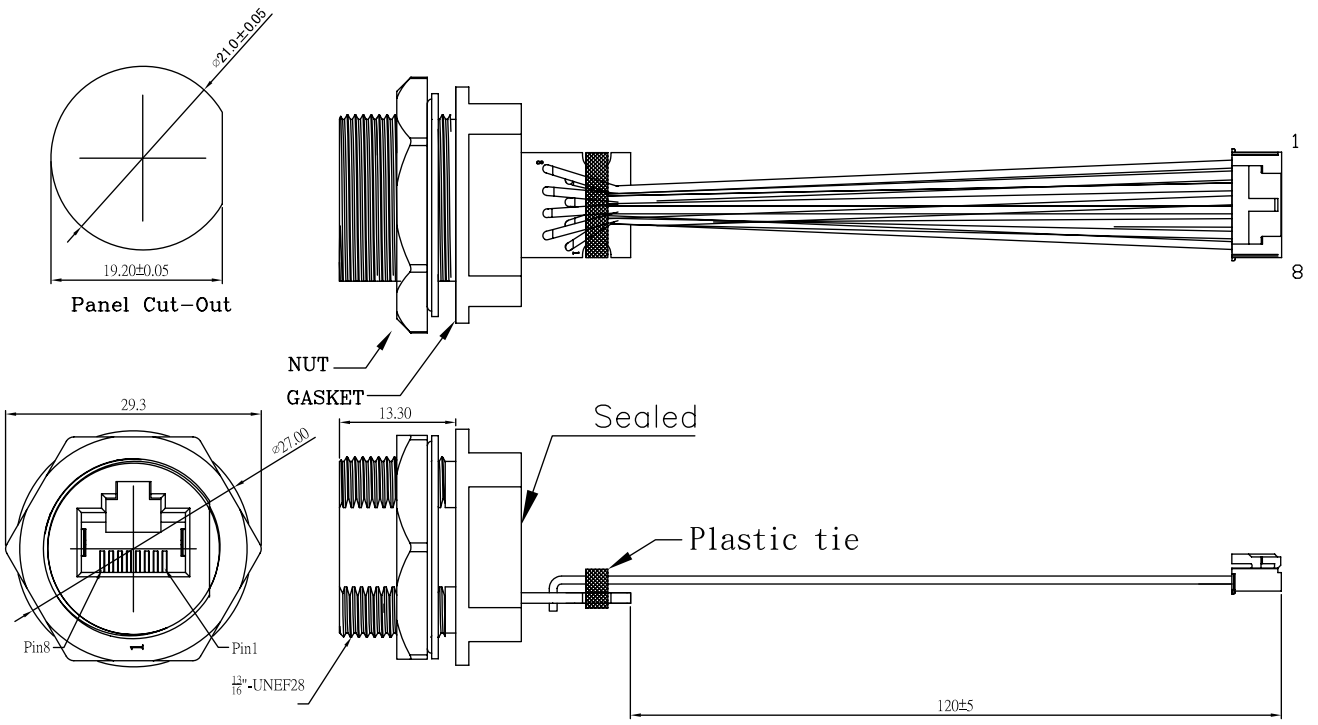

8	Brown	棕	8	Twist
7	Brown/White	棕/白	7	
6	Green	綠	6	
5	Blue/White	藍/白	5	Twist
4	Blue	藍	4	
3	Green/White	綠/白	3	
2	Orange	橙	2	Twist
1	Orange/White	橙/白	1	
Conn	Wire Color		Housing	
	Pin Out			

Materials

- **Plastic Housing** : Engineering Thermoplastic.
  Flammability Rating UL 94V-0.
- **Contacts** : Phosphor Bronze.
- **Plating** : Gold Plating Over Nickel In Contact.
- **Nut** : Engineering Thermoplastic Flammbility Rating UL 94V-0
- **Gasket** : Silicone
- **Panel Thick** : 1.5~4.5mm

PASS PASS PASS PASS PASS PASS PASS PASS RoHS

Ordering Information

3352E01020

Waterproof RJ45 Sealed Jack With Cable and Housing (IP 69K)

PANSTRONG

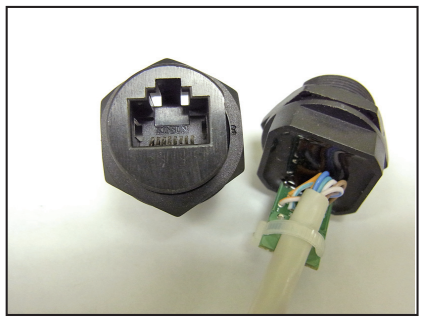

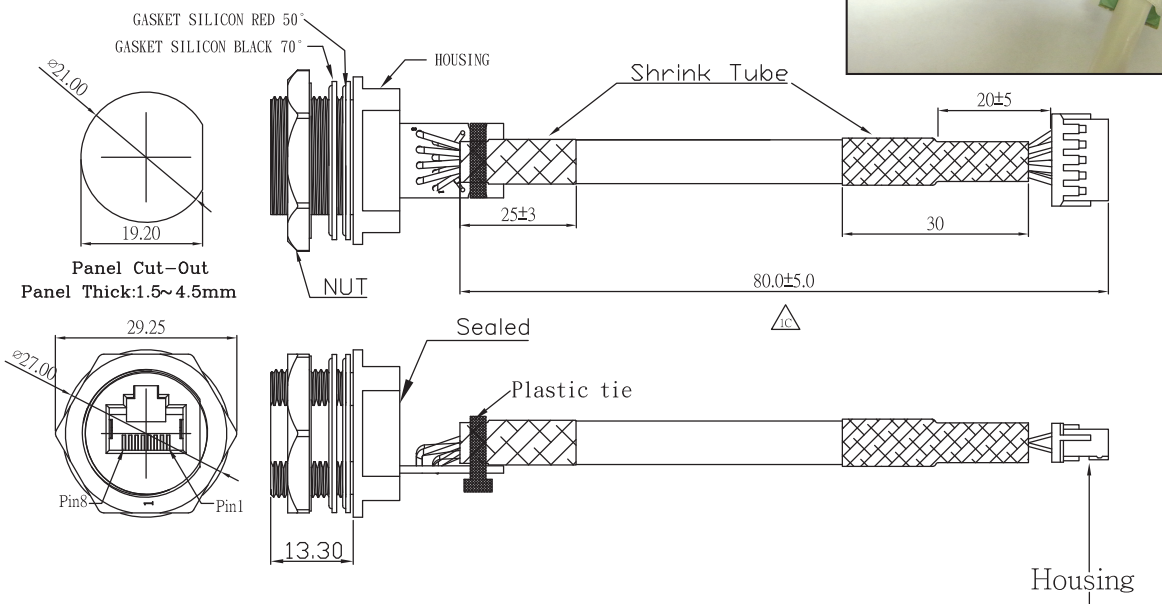

Shield	Blue/White	藍/白	10	
	Blue	藍	9	
	Green/White	綠/白	8	Twist
	Green	綠	7	
	Orange/White	橙/白	6	
	Orange	橙	5	Twist
	Red/White	紅/白	4	
	Red	紅	3	
	Brown/White	棕/白	2	Twist
	Brown	棕	1	
Conn	Wire Color		Housing	
Pin Out				

Materials

- **Plastic Housing** : Engineering Thermoplastic. Flammability Rating UL 94V-0.
- **Contacts** : Phosphor Bronze.
- **Plating** : Gold Plating Over Nickel In Contact.
- **Nut** : Engineering Thermoplastic Flammbility Rating UL 94V-0
- **Gasket** : Silicone
- **Panel Thick** : 1.5~4.5mm
- **Cable** : Cat 5e

PASS PASS PASS PASS PASS PASS PASS PASS RoHS

Ordering Information

Waterproof RJ45 Coupler (IP 69K)

PANSTRONG

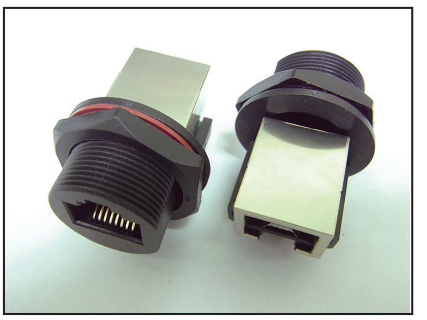

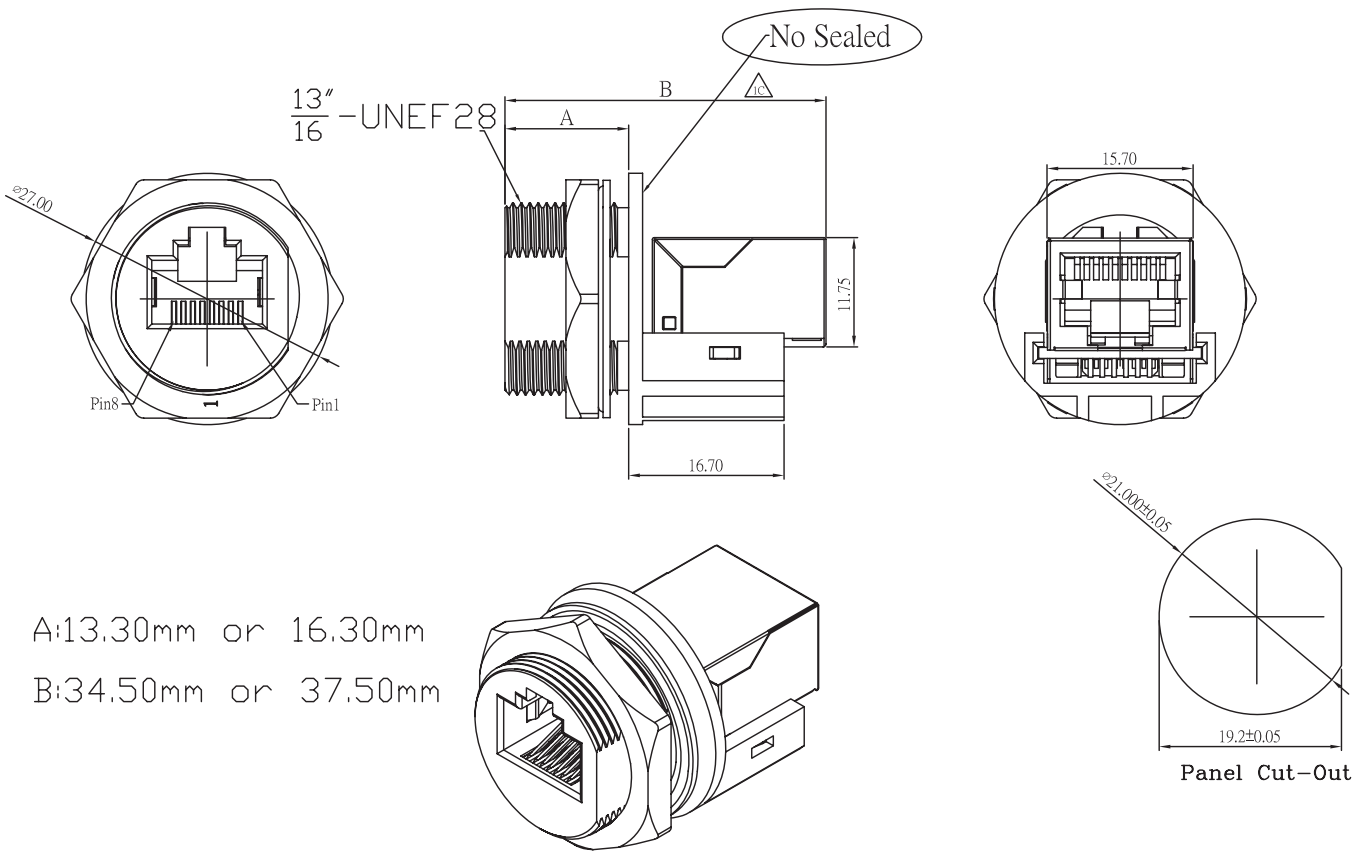

Materials

- **Plastic Housing** : Engineering Thermoplastic. Flammability Rating UL 94V-0.
- **Contacts** : Phosphor Bronze.
- **Plating** : Gold Plating Over Nickel In Contact.
- **Nut** : Engineering Thermoplastic Flammbility Rating UL 94V-0
- **Gasket** : Silicone
- **Panel Thick** : A=13.30mm Panel Thick=1.5~2.5mm ; A=16.30mm Panel Thick=1.5~6.0mm
- **Panel Thick** : 1.5~4.5m

PASS PASS PASS PASS PASS PASS PASS PASS RoHS

Ordering Information

3352F01010 A:13.30mm
3352F05010 A:16.30mm

Waterproof RJ45 With 90° Coupler (IP 69K)

PANSTRONG

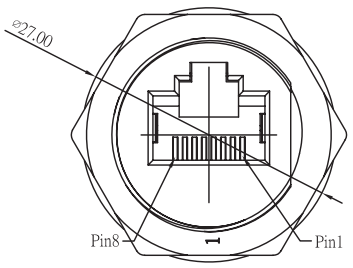

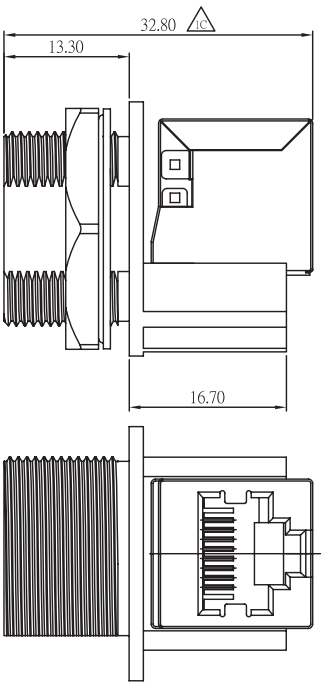

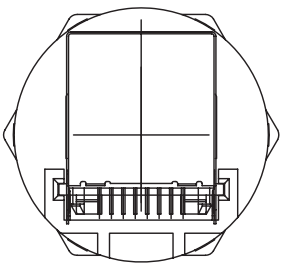

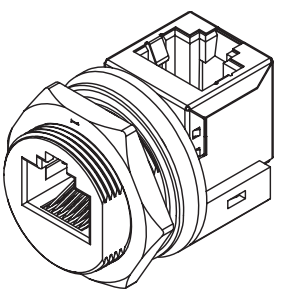

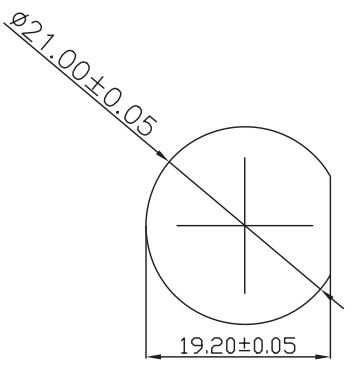

Panel Cut-Out

Materials

- **Plastic Housing** : Engineering Thermoplastic. Flammability Rating UL 94V-0.
- **Contacts** : Phosphor Bronze.
- **Plating** : Gold Plating Over Nickel In Contact.
- **Nut** : Engineering Thermoplastic Flammbility Rating UL 94V-0
- **Gasket** : Silicone
- **Panel Thick** : 1.5~4.5m

PASS PASS PASS PASS PASS PASS PASS PASS RoHS

Ordering Information

3352F01220

Waterproof RJ45 Cat 5e , Cat 6a Coupler (IP 69K)

PANSTRONG

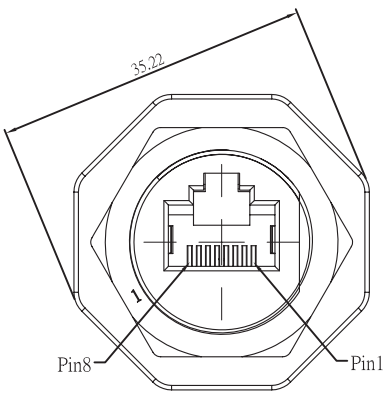

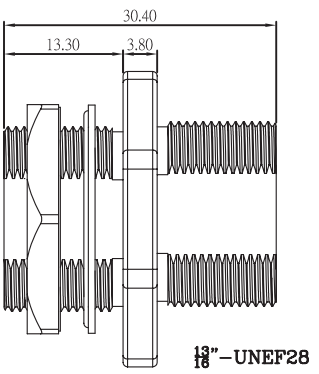

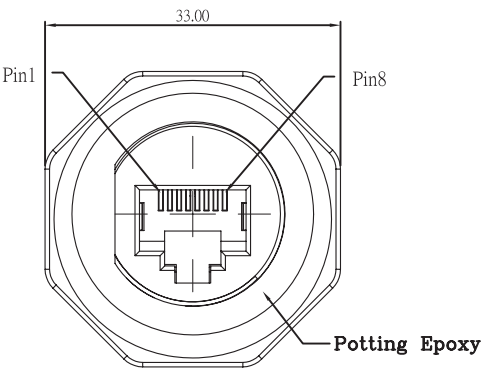

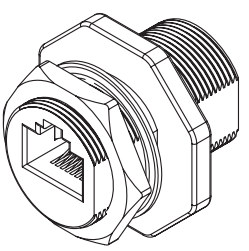

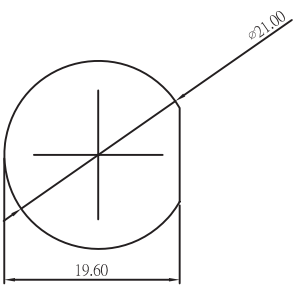

Panel Cut-Out
Panel Thick:1.5~2mm

Materials

- **Plastic Housing** : Engineering Thermoplastic. Flammability Rating UL 94V-0.
- **Contacts** : Phosphor Bronze.
- **Plating** : Gold Plating Over Nickel In Contact.
- **Nut** : Engineering Thermoplastic Flammbility Rating UL 94V-0
- **Gasket** : EPDM 70° COLOR : BLACK

PASS RoHS

Ordering Information

3352G02639 Cat 5e
3352G02040 Cat 6a

Waterproof RJ45 With Plug & Grounding Wire (IP 69K)

PANSTRONG

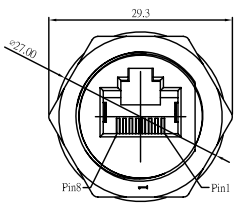

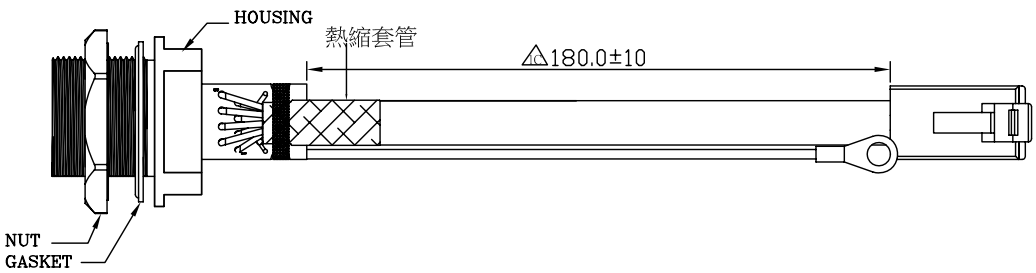

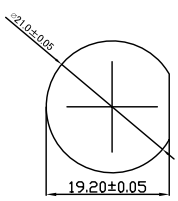

Panel Cut-Out

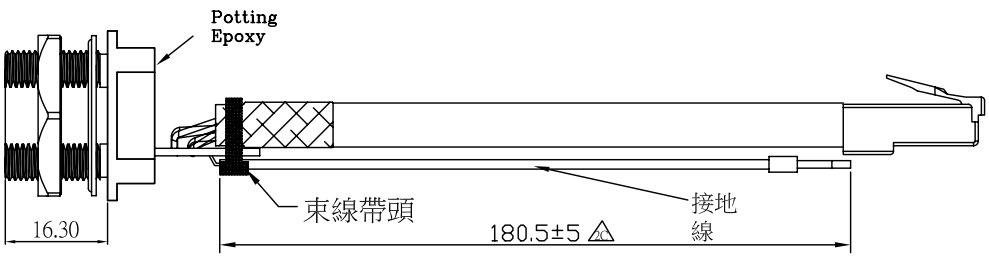

Shield	Wire Harness		Terminal Shield	
	Drain Wire	地線		
8	Brown	棕	8	Twist
7	Brown/White	棕/白	7	
6	Green	綠	6	Twist
5	Blue/White	藍/白	5	
4	Blue	藍	4	
3	Green/White	綠/白	3	
2	Orange	橙	2	Twist
1	Orange/White	橙/白	1	
Conn	Wire Color		plug	
Pin Out				

Materials

- **Plastic Housing** : Engineering Thermoplastic. Flammability Rating UL 94V-0.
- **Contacts** : Phosphor Bronze.
- **Plating** : Gold Plating Over Nickel In Contact.
- **Nut** : Engineering Thermoplastic Flammbility Rating UL 94V-0
- **Gasket** : Silicone
- **Panel Thick** : 1.5~6.0mm
- **RJ45 Plug Housing** : PC
- **RJ45 Plug Contacts** : Phospher Bronze, finis : Gold over Nickel
- **Cable** : Cat 5e

PASS PASS PASS PASS PASS PASS PASS PASS RoHS

Ordering Information

3352K06023

Waterproof RJ45 With Hidden PCB & Plug (IP 69K)

PANSTRONG

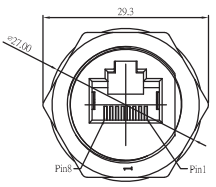

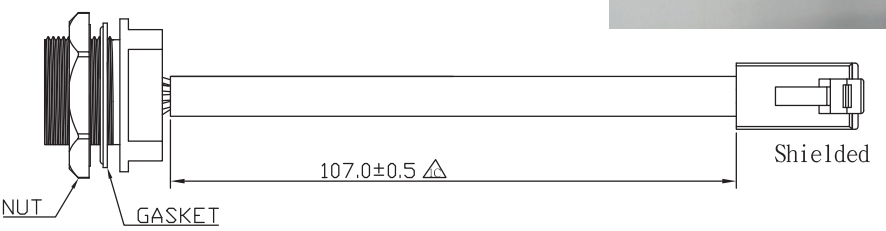

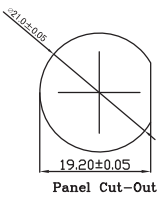

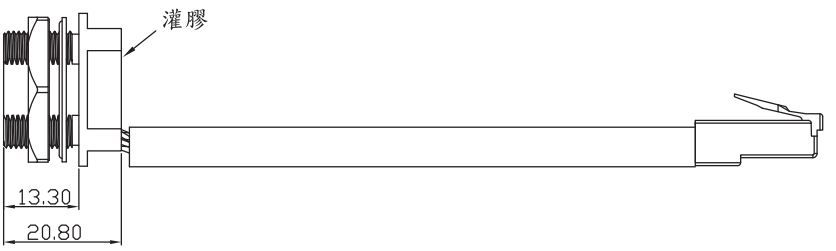

Shield	Wire Harness		Terminal	
	Drain Wire	地線	Shield	
8	Brown	棕	8	Twist
7	Brown/White	棕/白	7	
6	Green	綠	6	
5	Blue/White	藍/白	5	Twist
4	Blue	藍	4	
3	Green/White	綠/白	3	
2	Orange	橙	2	Twist
1	Orange/White	橙/白	1	
Conn	Wire Color		plug	
Pin Out				

Materials

- **Plastic Housing** : Engineering Thermoplastic. Flammability Rating UL 94V-0.
- **Contacts** : Phosphor Bronze.
- **Plating** : Gold Plating Over Nickel In Contact.
- **Nut** : Engineering Thermoplastic Flammbility Rating UL 94V-0
- **Gasket** : Silicone.
- **Panel Thick** : 1.5~4.5mm
- **RJ45 Plug Housing** : Pc.
- **RJ45 Plug Contact** : Phosphor Bronze, finis : Gold over Nickel.
- **Cable** : Cat 5e.

PASS PASS PASS PASS PASS PASS PASS PASS RoHS

Ordering Information

3352K26020

Waterproof USB 2.0 With Wire Harness (IP 69K)

PANSTRONG

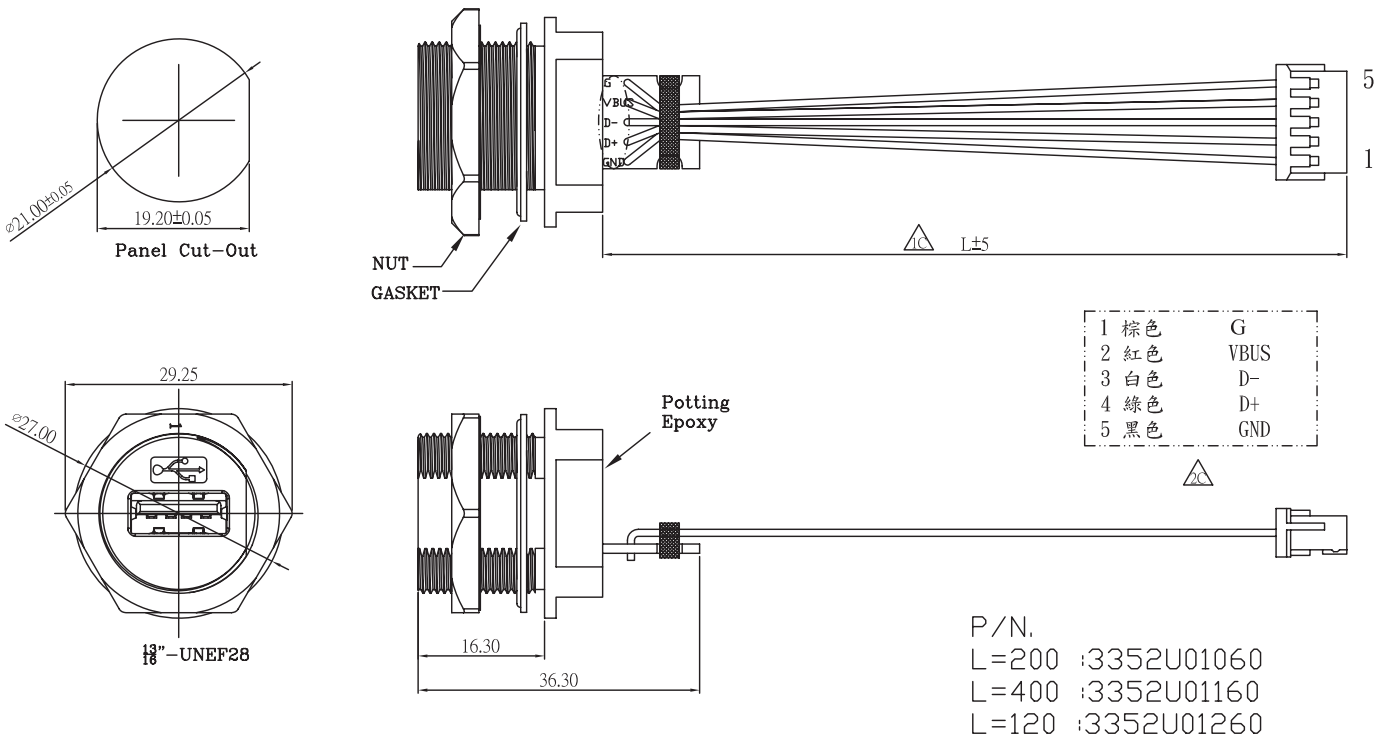

Materials

- **Plastic Housing** : Engineering Thermoplastic. Flammability Rating UL 94V-0.
- **Contacts** : Phosphor Bronze.
- **Plating** : Gold Plating Over Nickel In Contact.
- **Nut** : Engineering Thermoplastic Flammbility Rating UL 94V-0
- **Gasket** : Silicone.
- **Panel Thick** : 1.5~6.0mm

PASS PASS PASS PASS PASS PASS PASS PASS RoHS

Ordering Information

3352U01060

Waterproof USB 2.0 With Plug (IP 69K)

PANSTRONG

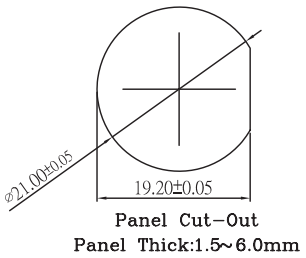

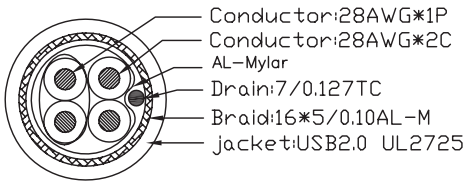

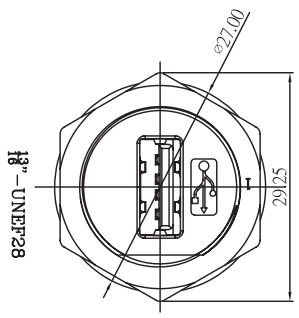

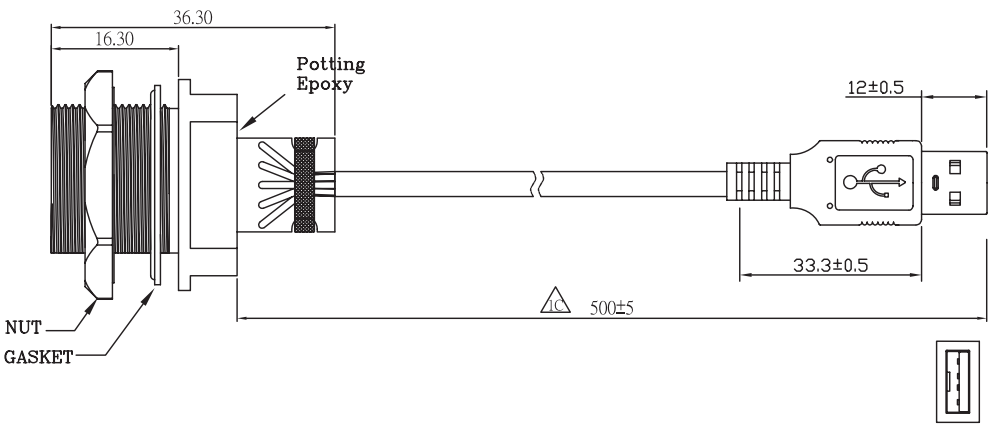

Materials

- **Plastic Housing** : Engineering Thermoplastic.
  Flammability Rating UL 94V-0.
- **Contacts** : Phosphor Bronze.
- **Plating** : Gold Plating Over Nickel In Contact.
- **Nut** : Engineering Thermoplastic Flammbility Rating UL 94V-0
- **Gasket** : Silicone.
- **Panel Thick** : 1.5~6.0mm

PASS PASS PASS PASS PASS PASS PASS PASS RoHS

Ordering Information

3352U03010

Waterproof USB 2.0 Dip Type (IP 69K)

PANSTRONG

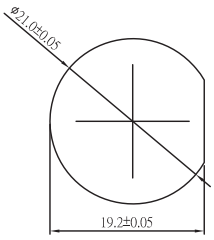

Panel Cut-Out
Panel Thick:1.5~6.0mm

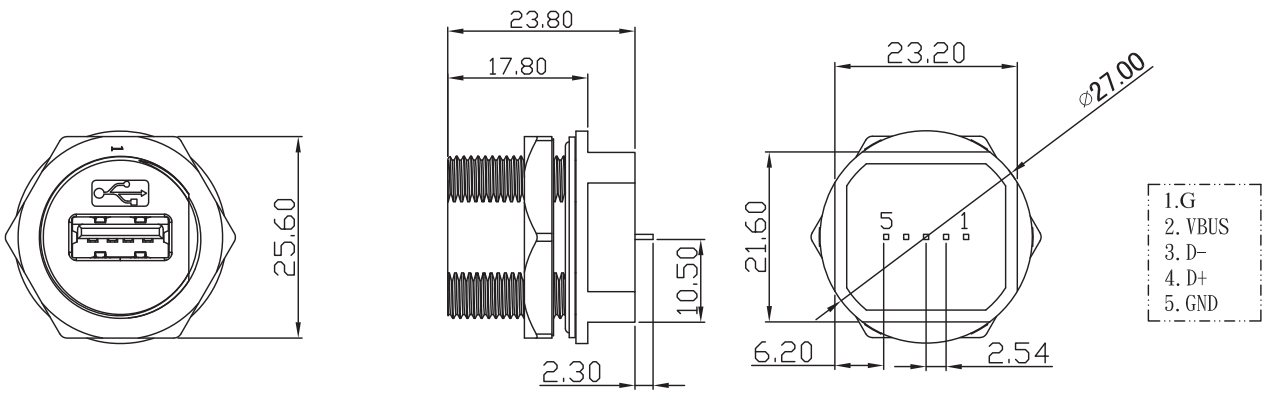

Materials

- **Plastic Housing** : Engineering Thermoplastic. Flammability Rating UL 94V-0.
- **Contacts** : Phosphor Bronze.
- **Plating** : Gold Plating Over Nickel In Contact.
- **Nut** : Engineering Thermoplastic Flammbility Rating UL 94V-0
- **Gasket** : Silicone.
- **Panel Thick** : 1.5~6.0mm

PASS PASS PASS PASS PASS PASS PASS PASS RoHS

Ordering Information

3352U01360

Waterproof USB 3.0 With Plug (IP 69K)

PANSTRONG

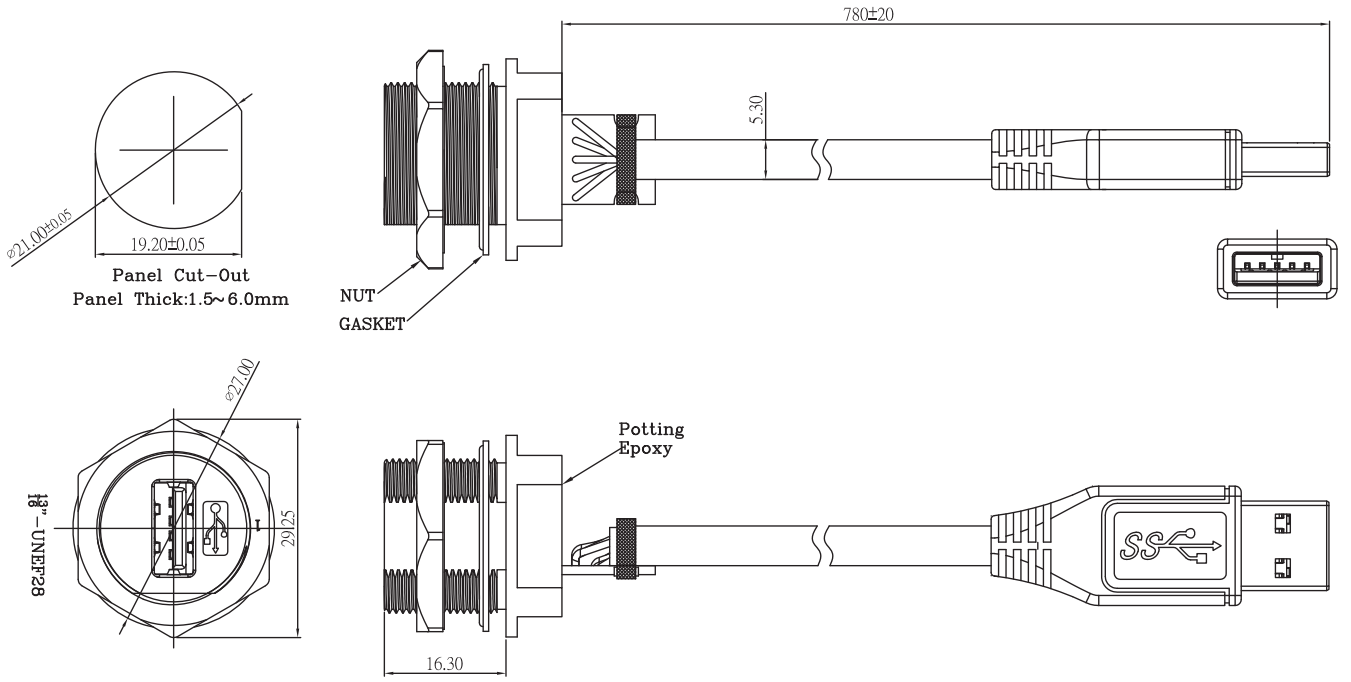

Materials

- **Plastic Housing** : Engineering Thermoplastic.
  Flammability Rating UL 94V-0.
- **Contacts** : Phosphor Bronze.
- **Plating** : Gold Plating Over Nickel In Contact.
- **Nut** : Engineering Thermoplastic Flammbility Rating UL 94V-0
- **Gasket** : Silicone.
- **Panel Thick** : 1.5~6.0mm

PASS PASS PASS PASS PASS PASS PASS PASS RoHS

Ordering Information

3352U Series

Waterproof Cable Side (IP 69K)

PANSTRONG

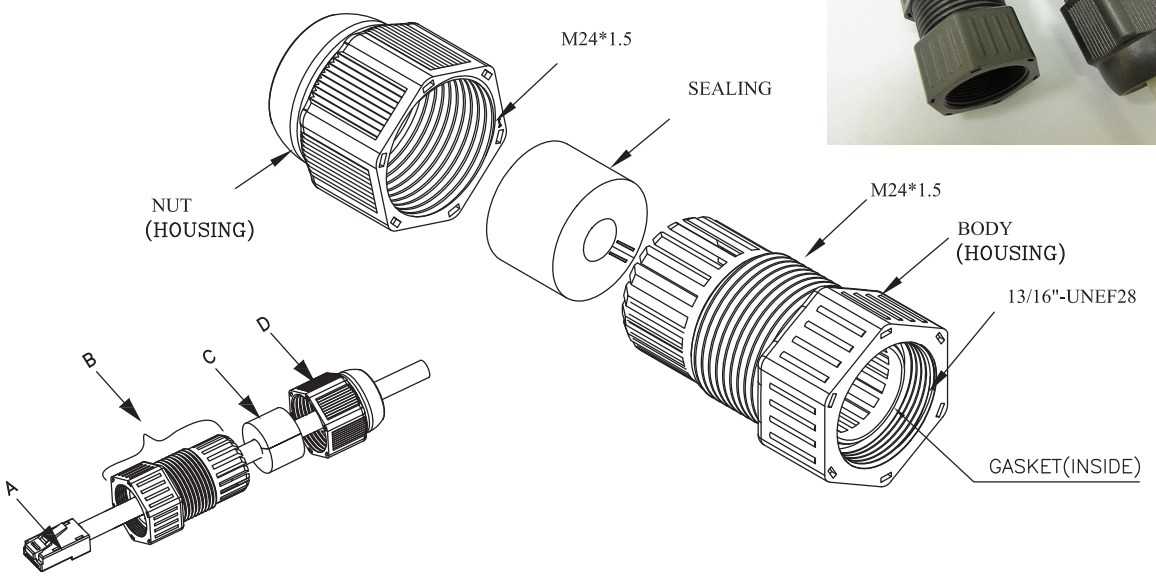

A.Plug+Cable(not included)
B.Body(Gasket inside)
C.O-Ring
D.Nut

Installation

Step1:A into D
Step2:C into step1
Step3:B into step2

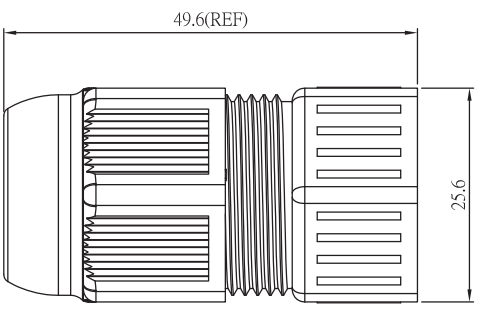

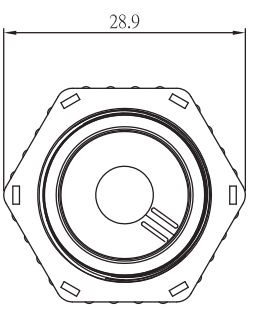

Seals	Size
1	ø5.5~7
2	ø7~9.5

Materials

- **Plastic Housing** : Engineering Thermoplastic. Flammability Rating UL 94V-0.
- **Sealing Nut** : Engineering Thermoplastic. Flammability Rating UL 94V-0.
- **Casket** : Silicon
- **Sealing** : Silicon

PASS RoHS

Ordering Information

3352L02010

Waterproof Cable Assembly (IP 69K)

PANSTRONG

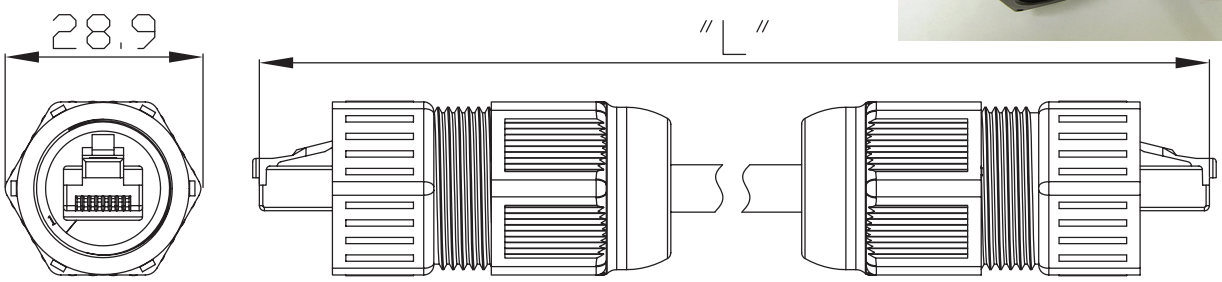

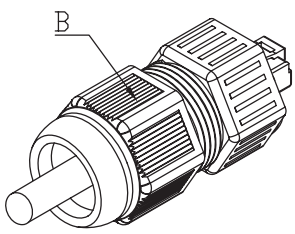

TYPE 1

NO.	NAME	COLOR	SPECIFICATION
A	3352 Plug W/Cable	BLACK	3352L02010+RJ45 Plug
B	Other Side Type	BLACK	See Below Table
C	Cable	BLACK	UL,Cat.5e

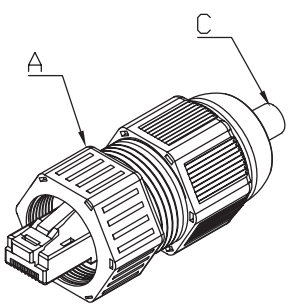

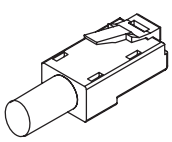

TYPE 1

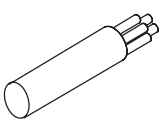

TYPE 1

NO.	The Other Side Option Type
1	3352 Plug W/Cable
2	RJ45 Plug
3	Cable to be Flayed

Materials

Name	Color	Specification	QTY
Gasket	Red	Silicone	1
Body	Black	NY66	1
Seal	Red	Silicon	1
Seal Nut	Black	PBT	1

PASS PASS PASS PASS PASS PASS PASS PASS RoHS

- **RJ45 Plug Housing :** PC
- **RJ45 Plug Contacts :** Phospher Bronze,finis : Gold over Nickel
- **Cable :** Cat 5e.

Ordering Information

3352-C Series

Waterproof Cap (IP 69K)

PANSTRONG

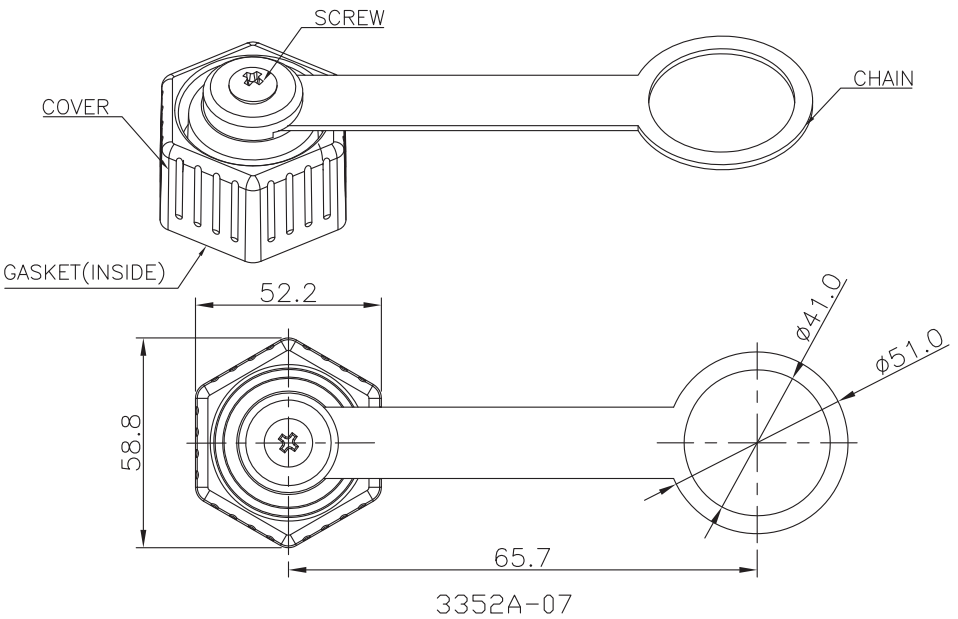

3352A-07

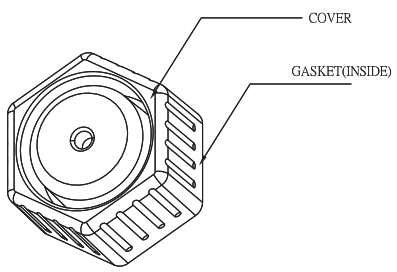

3352A-04

Materials

- **Cap** : Engineering Thermoplastic
  Flammability Rating UL 94V-0.
- **Chain** : Silicone.
- **Screws** : Stainless Steel.
- **Gasket** : Silicone.

PASS RoHS

Ordering Information

3352A-04 : Cap and Seal only
3352A-07 : Cap With Chain

Waterproof RJ45 Cat. 5e Coupler (IP 68)

PANSTRONG

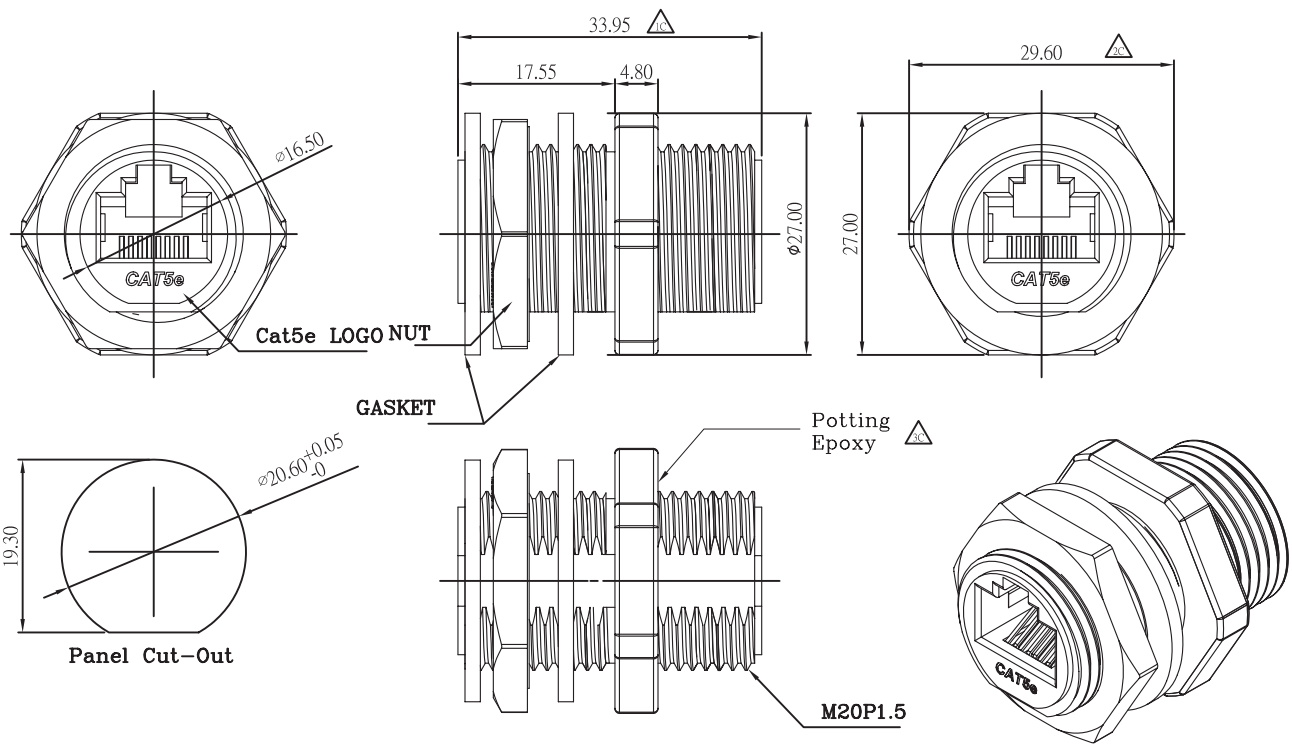

Materials

- **Plastic Housing** : Engineering Thermoplastic Flammability Rating UL 94V-0.
- **Contacts** : Phosphor Bronze.
- **Plating** : Gold Plating Over Nickel In Contact.
- **Nut** : Engineering Thermoplastic Flammbility Rating UL 94V-0
- **Gasket** : EPDM 70° COLOR : BLACK

PASS RoHS

Ordering Information

3354C01402

Waterproof Cable Side (IP 68)

PANSTRONG

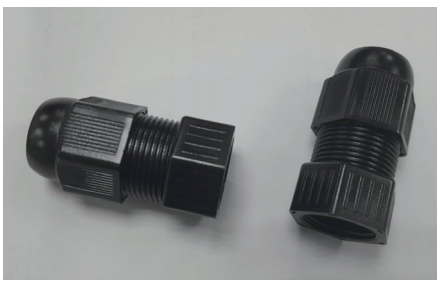

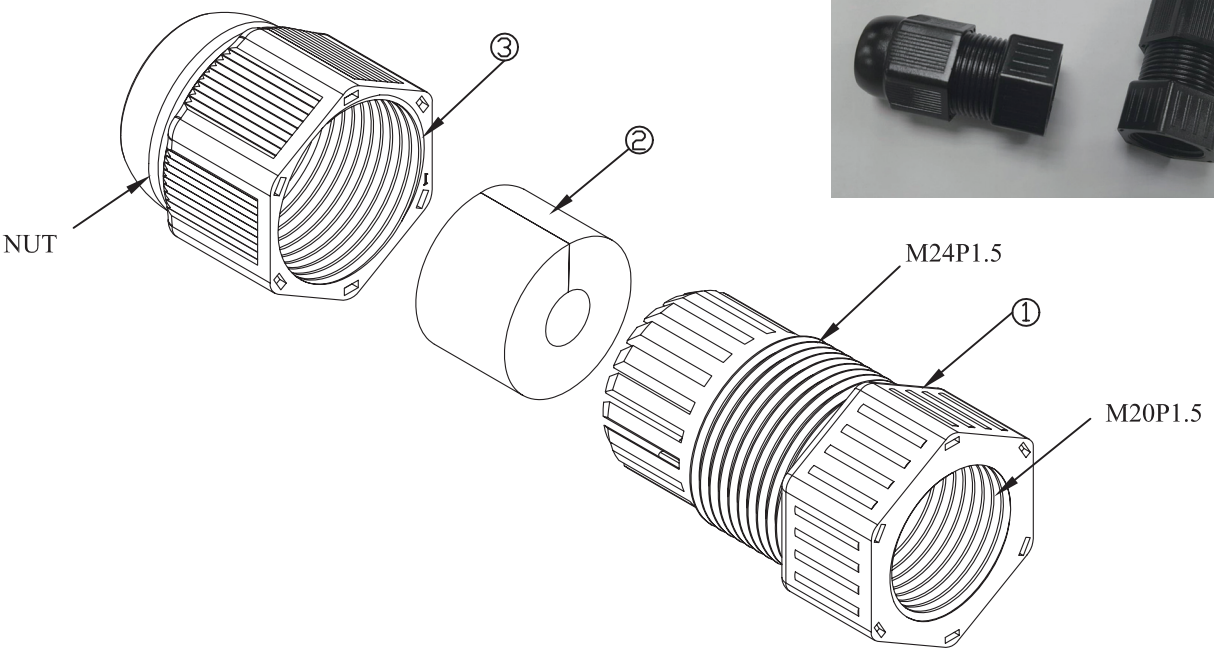

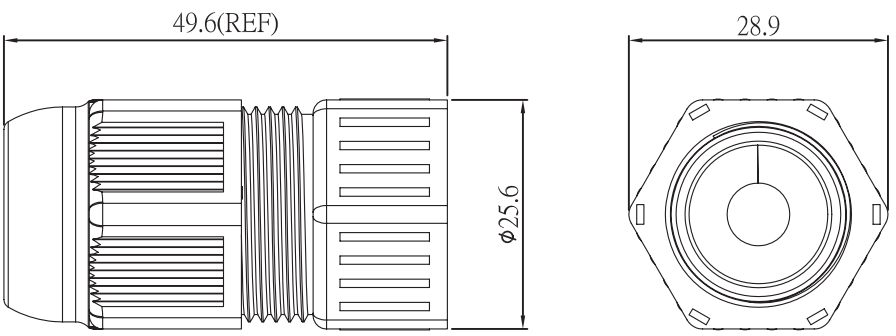

Materials

No.	Name	Color	Specification	QTY
1	Body	Black	PC	1
2	Seal	Red	Silicone	1
3	Seal Nut	Black	PC	1

PASS PASS PASS PASS PASS PASS PASS PASS RoHS

Ordering Information

3354L-11

Metal Waterproof RJ45 With Plug (IP 68)

PANSTRONG

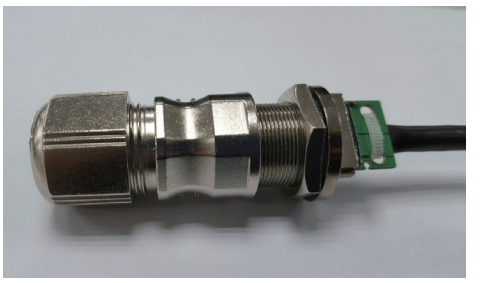

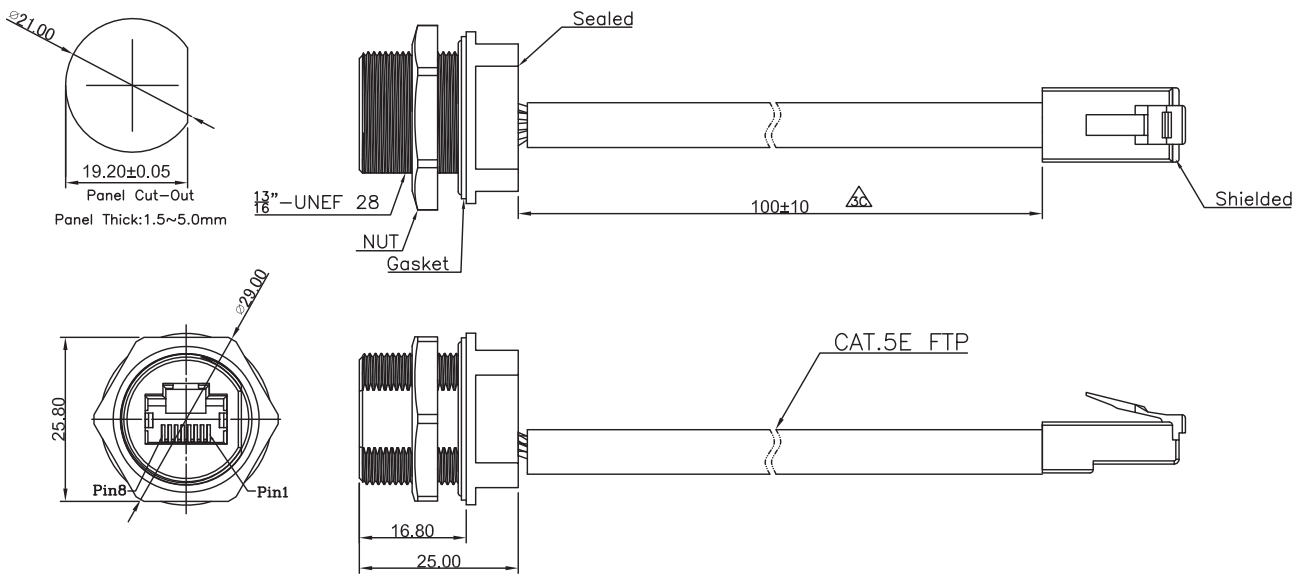

Materials

- **Housing** : Zinc Alloy,Nickel Plated
- **Nut** : Copper Alloy,Nickel Plated
- **Gasket** : Silicone Color : Red
- **Contacts** : Phosphor Bronze
- **Plating** : Gold Plating Over Nickel In Contact.

PASS RoHS

Ordering Information

3356D Series

Metal Waterproof RJ45 With Wire Harness (IP 68)

PANSTRONG

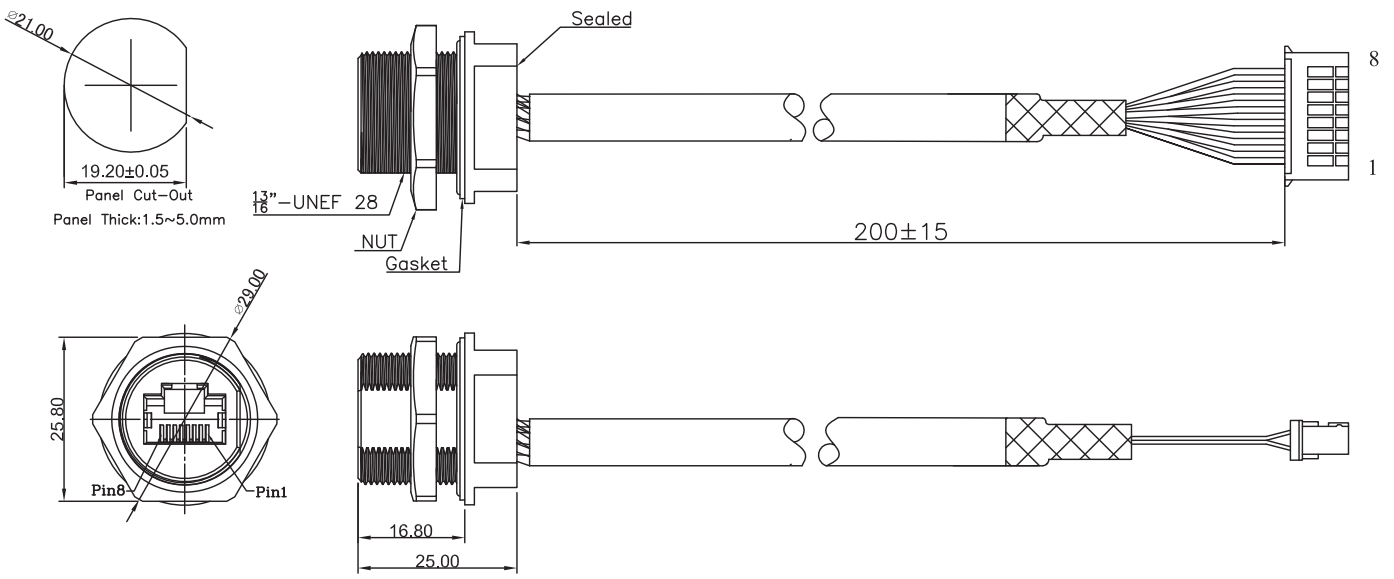

Materials

- **Housing** : Zinc Alloy,Nickel Plated
- **Nut** : Copper Alloy,Nickel Plated
- **Gasket** : Silicone Color : Red
- **Contacts** : Phosphor Bronze
- **Plating** : Gold Plating Over Nickel In Contact.
- **Housing** : Pitch 2.5mm

PASS PASS PASS PASS PASS PASS PASS PASS RoHS

Ordering Information

3356E Series

Metal Waterproof USB With Wire Harness (IP 68)

PANSTRONG

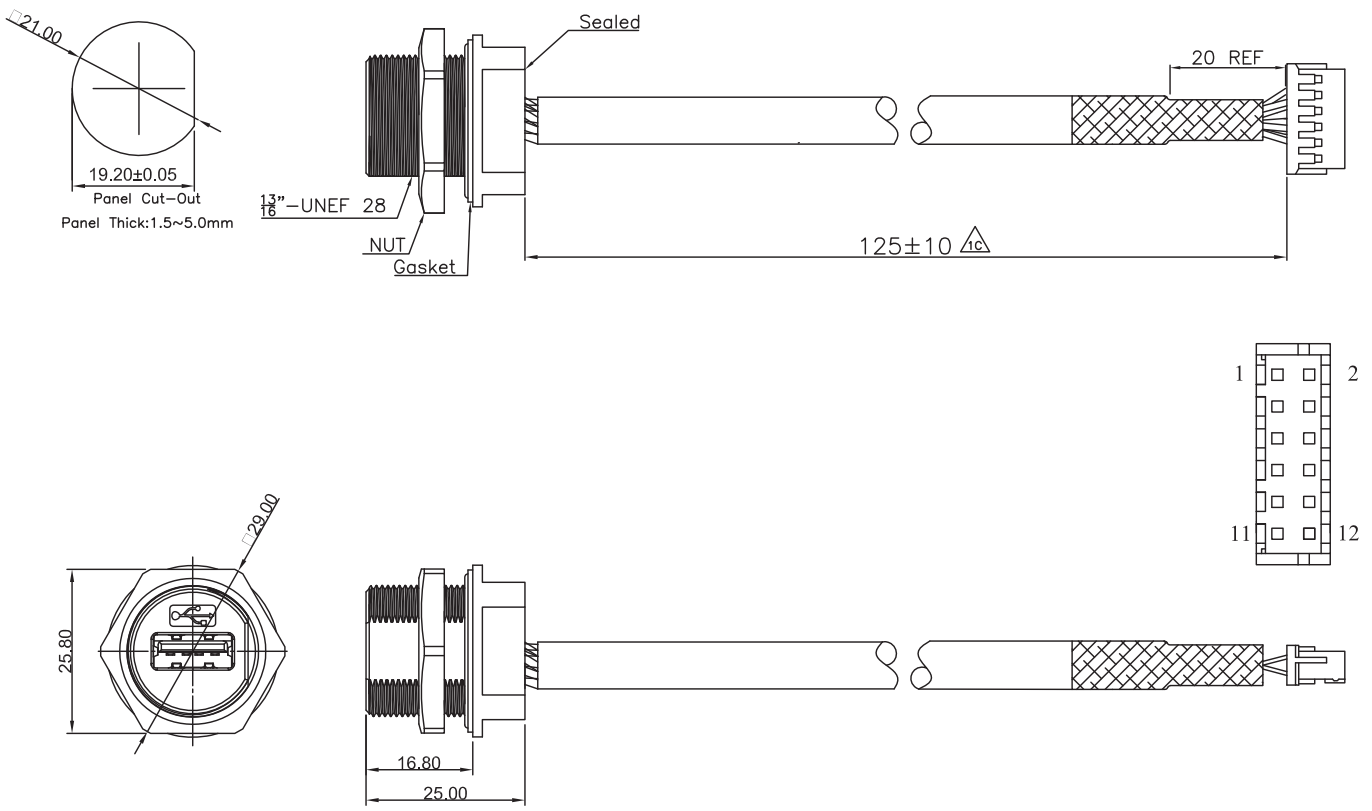

Materials

- **Housing** : Zinc Alloy,Nickel Plated
- **Nut** : Copper Alloy,Nickel Plated
- **Gasket** : Silicone Color : Red
- **Housing** : Pitch 2.0mm

PASS RoHS

Ordering Information

3356U Series

Metal Waterproof Cable Side (IP 68)

PANSTRONG

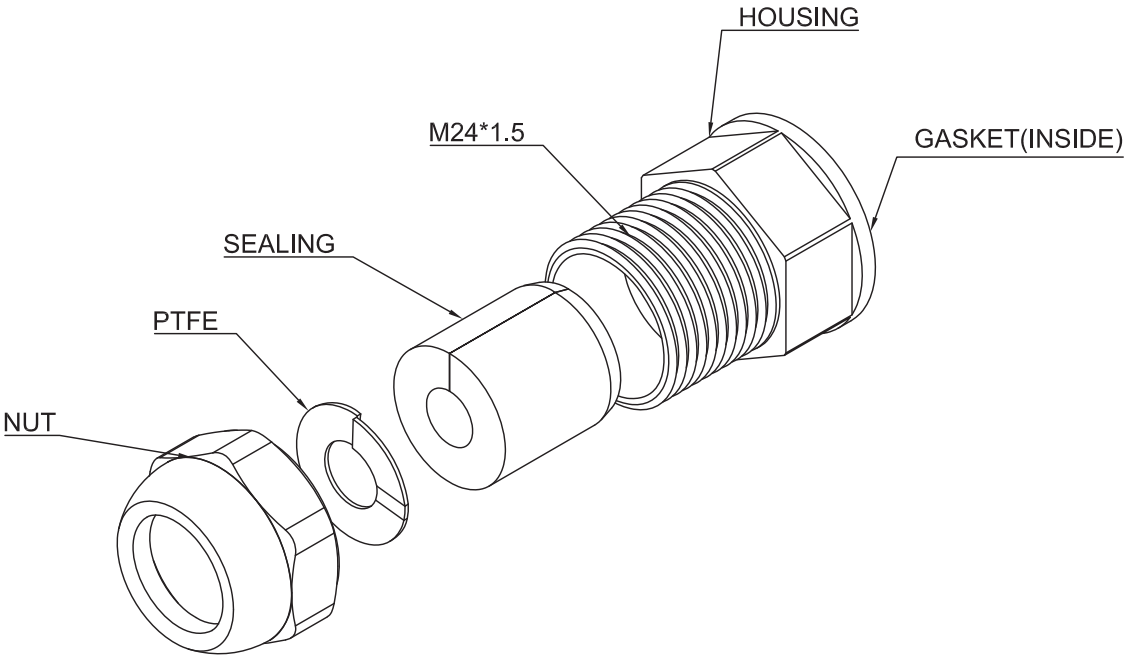

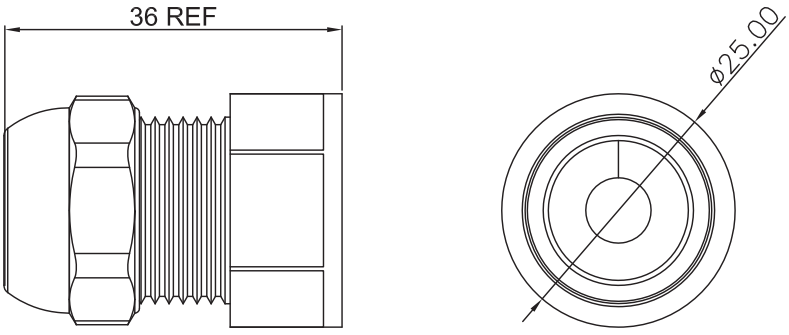

Materials

- **Housing** : Copper Alloy,Nickel Plated
- **Nut** : Zinc Alloy,Nickel Plated
- **Gasket** : Silicone Color : Red
- **Sealyng** : Silicone Color : Red
- **TPFE** : Polytetrafluoroethen

PASS RoHS

Ordering Information

3356L Series

Metal Waterproof Cable Assembly (IP 68)

PANSTRONG

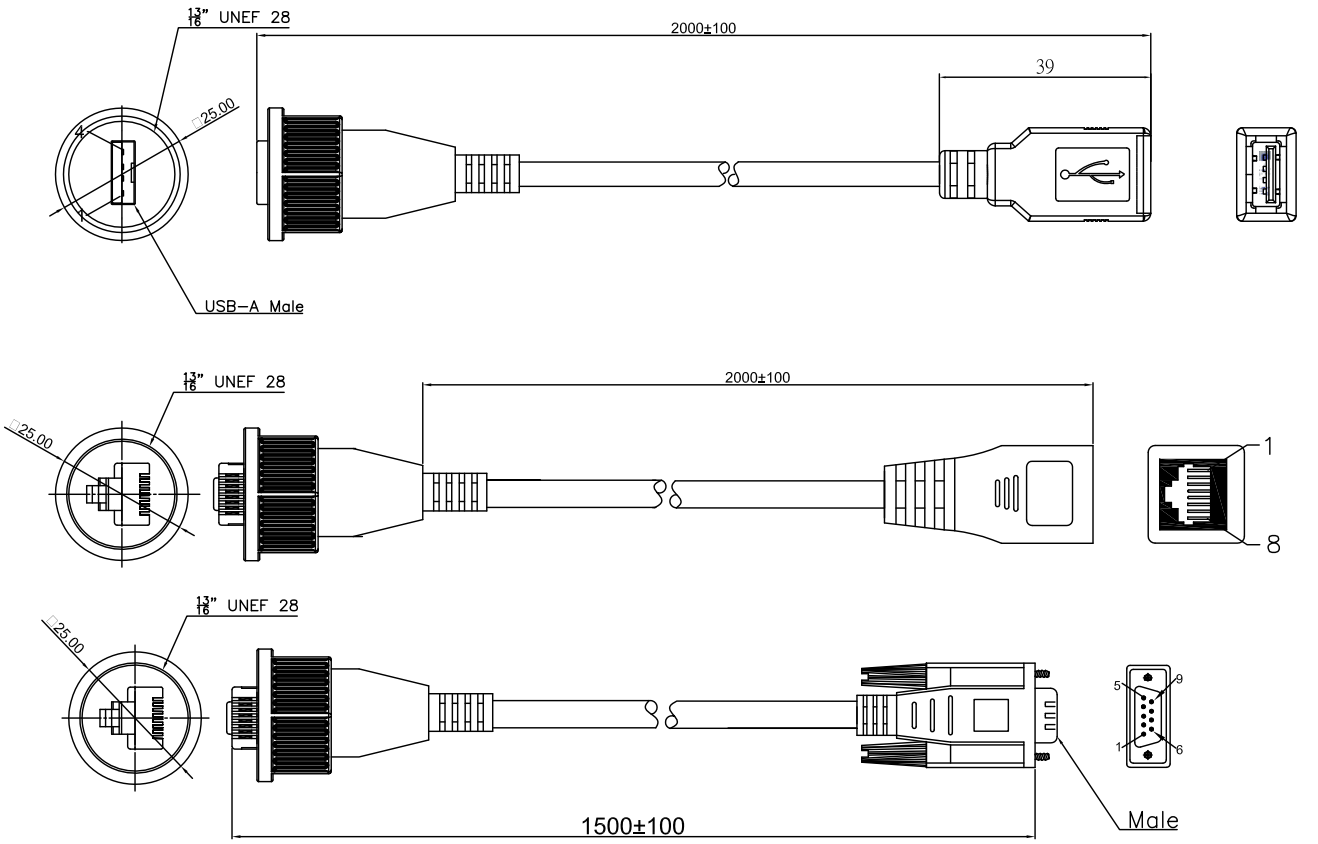

Materials

- **Cap** : Zinc Alloy,Nickel Plated
- **Gasket** : Silicone Color : Red

PASS RoHS

Ordering Information

3356C Series

Metal Waterproof Cap (IP 68)

PANSTRONG

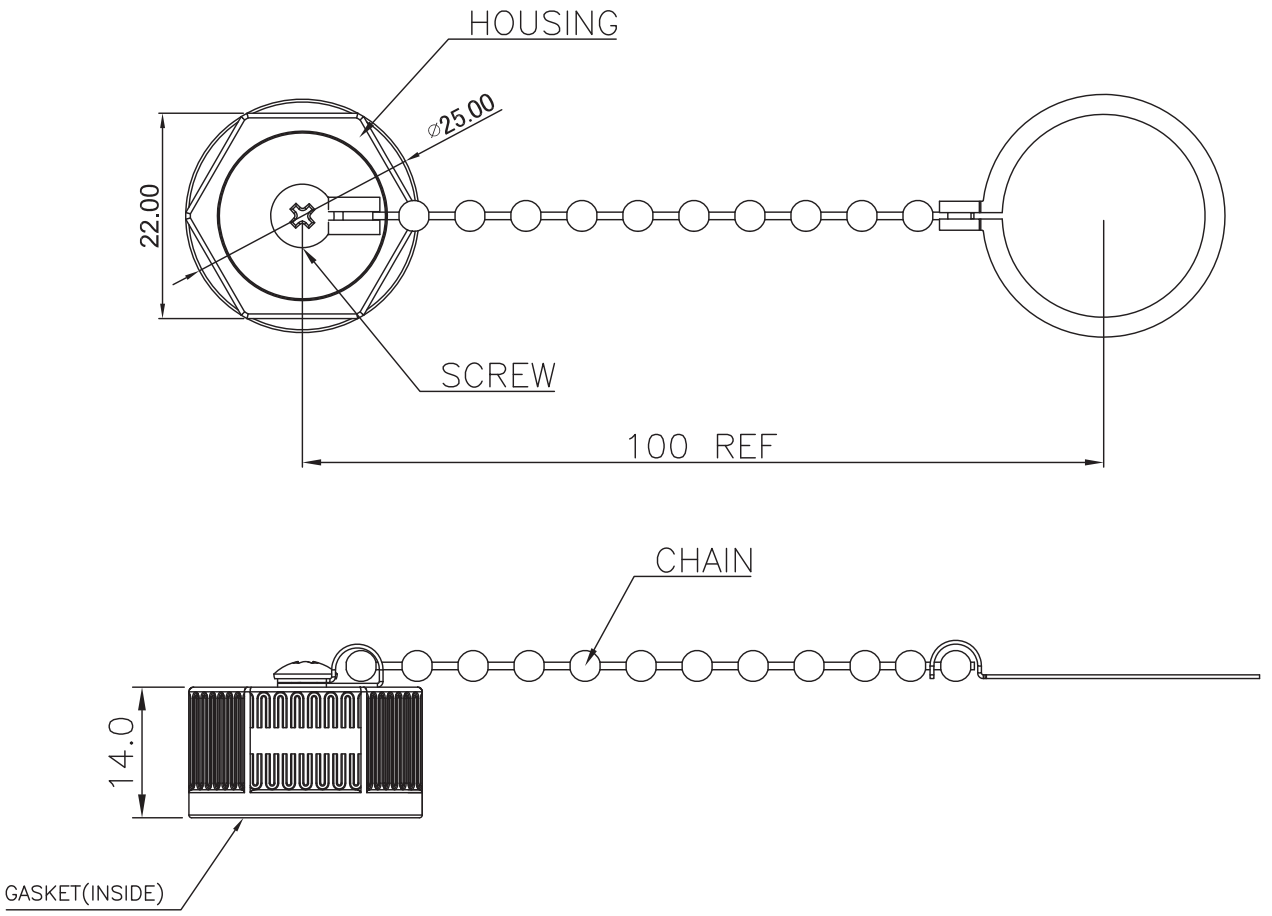

Materials

- **Housing** : Zinc Alloy,Nickel Plated
- **Gasket** : Silicone Color : Red
- **Chain** : Stainless Steel
- **Screw** : Stainless Steel

PASS RoHS

Ordering Information

3356A Series

Waterproof Cat. 5e RJ45 (IP 68)

PANSTRONG

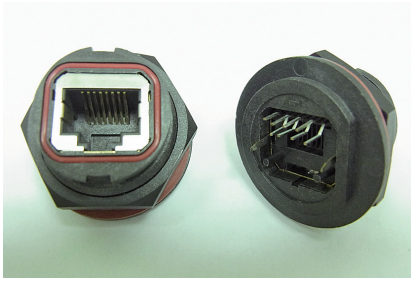

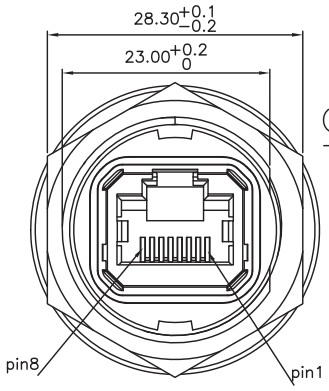

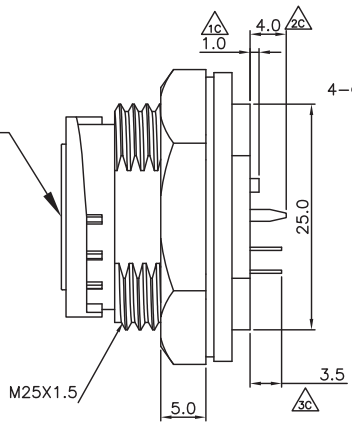

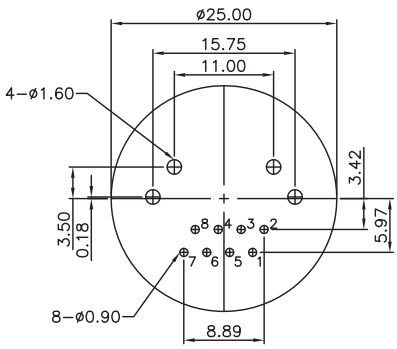

PCB LAYOUT/TOP VIEW

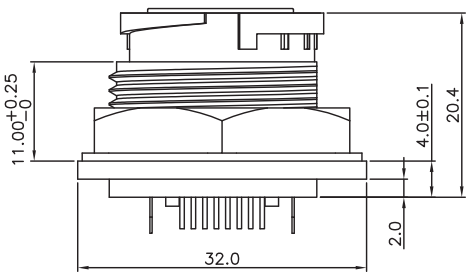

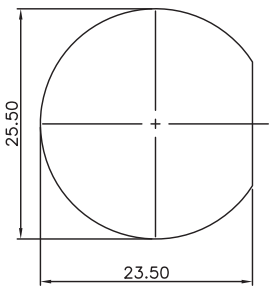

Panel Cut−Out
Panel Thick:2.0~4.0mm

Materials

- **Plastic Housing** : Engineering Thermoplastic
  Flammability Rating UL 94V-0.
- **Contacts** : Phosphor Bronze.
- **Plating** : Gold Plating Over Nickel In Contact.
  Tin Plating Over Nickel In Solder Area.
- **O-ring** : Silicon
- **Gasket** : Silicon
- **Shielded** : Brass With Nickel Plated
- **Nut** : Engineering Thermoplastic
  Flammbility Rating UL 94V-0

PASS PASS PASS PASS PASS PASS PASS PASS RoHS

Ordering Information

3351D00030

Waterproof Cat. 5e RJ45 With Wafer (IP 68)

PANSTRONG

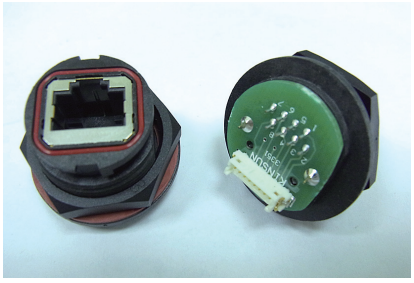

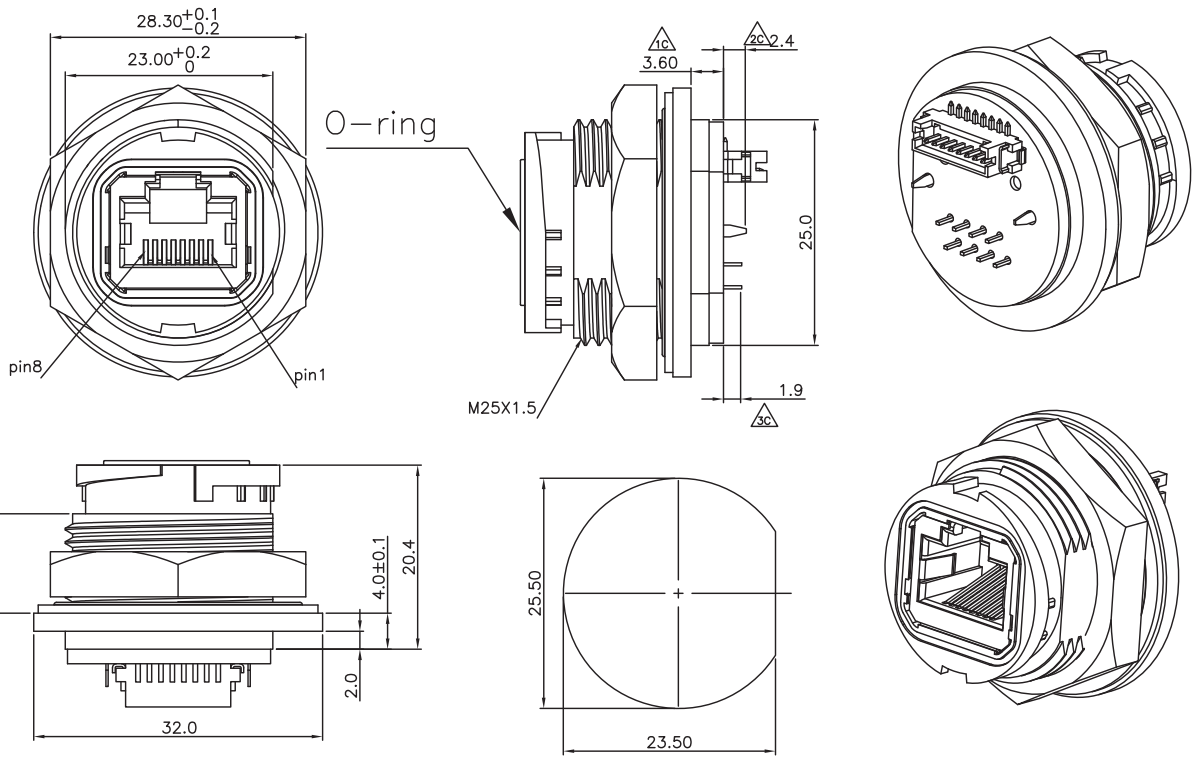

Panel Cut−Out

Panel Thick:2.0~4.0mm

Materials

- **Plastic Housing** : Engineering Thermoplastic
  Flammability Rating UL 94V-0.
- **Contacts** : Phosphor Bronze.
- **Plating** : Gold Plating Over Nickel In Contact.
  Tin Plating Over Nickel In Solder Area.
- **O-ring** : Silicon
- **Gasket** : Silicon
- **Shielded** : Brass With Nickel Plated
- **Nut** : Engineering Thermoplastic
  Flammbility Rating UL 94V-0

PASS PASS PASS PASS PASS PASS PASS PASS RoHS

Ordering Information

3351D00130

Waterproof Cat6 RJ45 With IDC (IP 68)

PANSTRONG

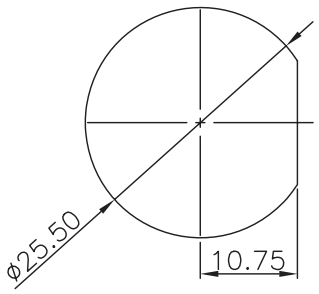

Panel Cut-Out
Panel Thick:2.0~4.0mm

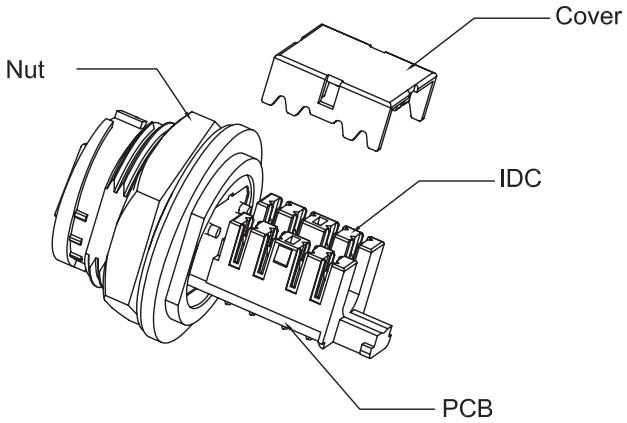

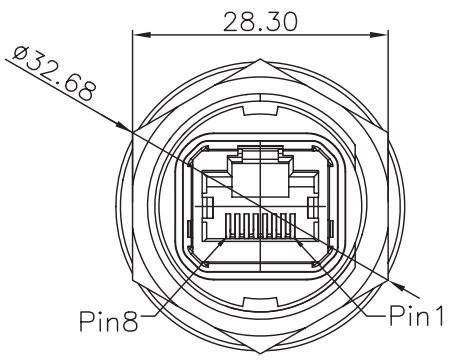

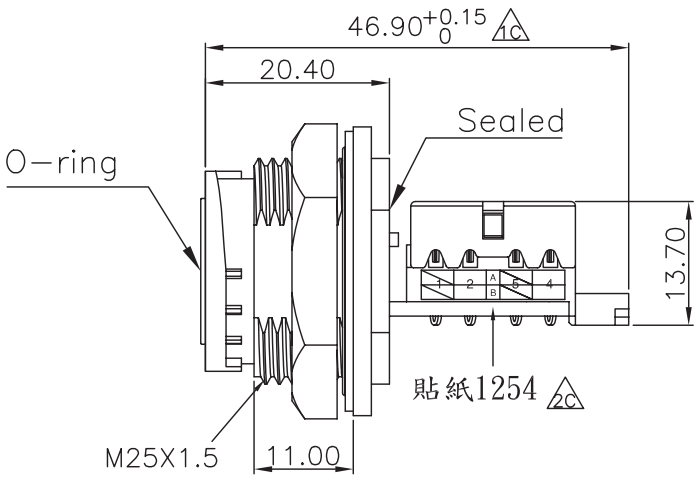

Materials

- **Plastic Housing** : Engineering Thermoplastic Flammability Rating UL 94V-0.
- **Contacts** : Phosphor Bronze.
- **Contacts Plating**: Gold Plating Over Nickel In Contact.
- **O-ring** : Silicon
- **Gasket** : Silicon
- **IDC Pin** : Brass
- **IDC Pin Plating** : Tin Plating Over Nickel
- **Nut** : Engineering Thermoplastic Flammbility Rating UL 94V-0

PASS RoHS

Ordering Information

3351F00030

Waterproof RJ45 With Cable and Plug (IP 68)

PANSTRONG

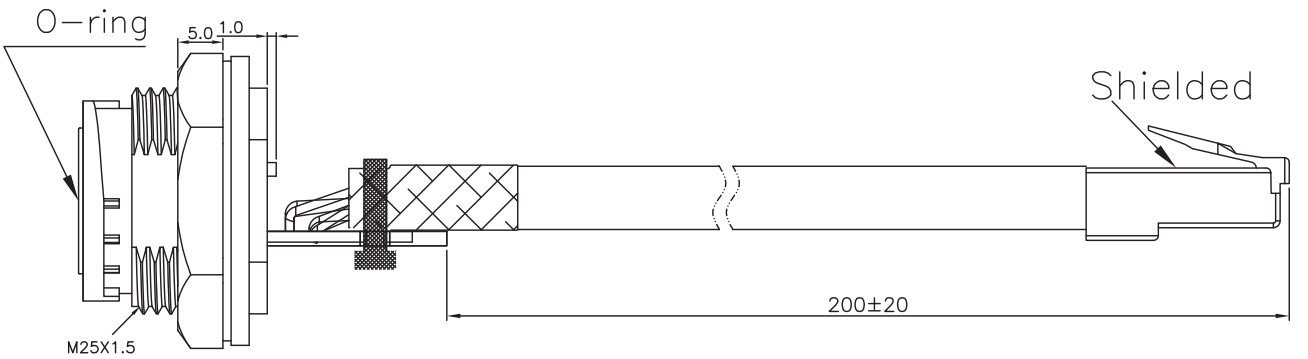

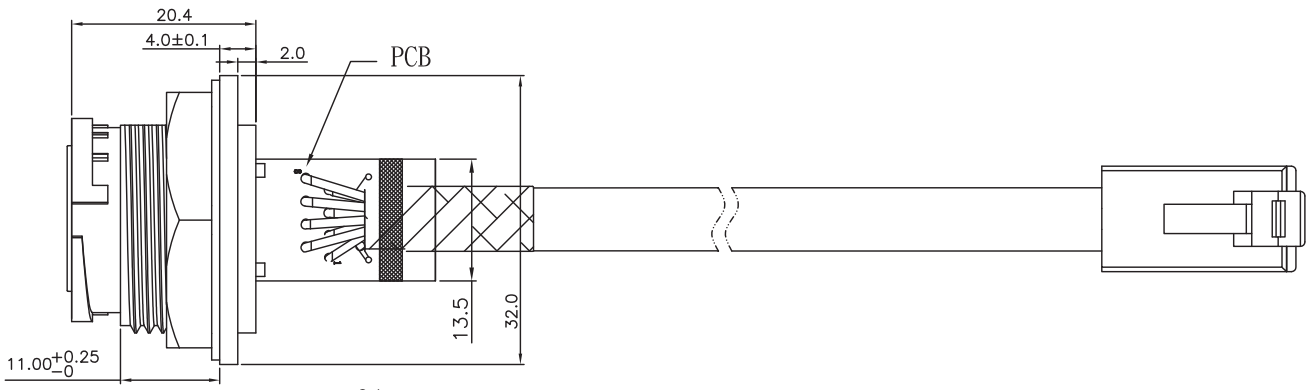

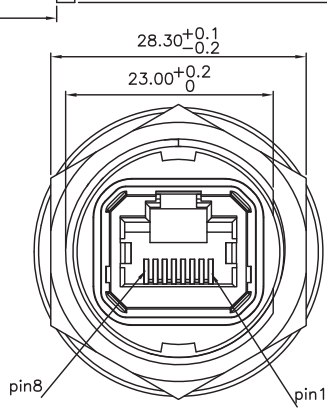

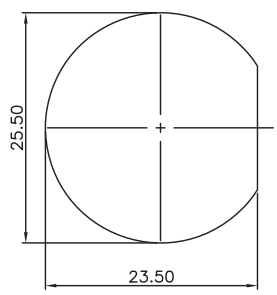

Panel Cut-Out

Materials

- **Plastic Housing** : Engineering Thermoplastic Flammability Rating UL 94V-0.
- **Contacts** : Phosphor Bronze.
- **Plating** : Gold Plating Over Nickel In Contact. Tin Plating Over Nickel In Solder Area.
- **Shielded** : Brass With Nickel Plated
- **Nut** : Engineering Thermoplastic Flammbility Rating UL 94V-0
- **Gasket** : Silicon
- **O-ring** : Silicon

PASS PASS PASS PASS PASS PASS PASS PASS RoHS

Ordering Information

3351H00031

Waterproof Cable Side (IP 68)

PANSTRONG

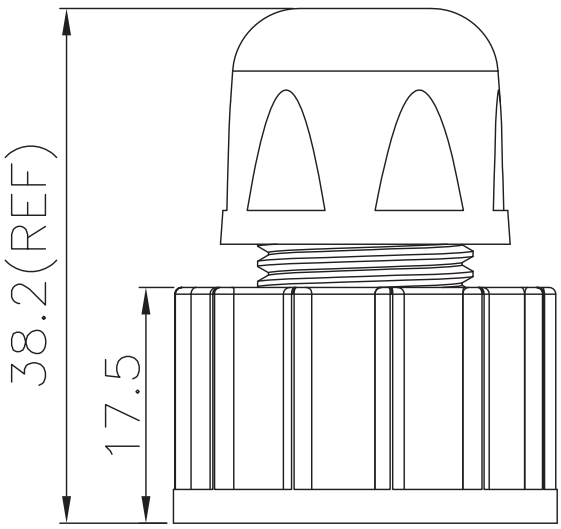

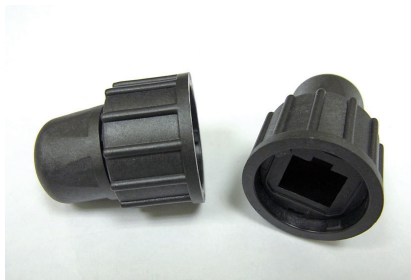

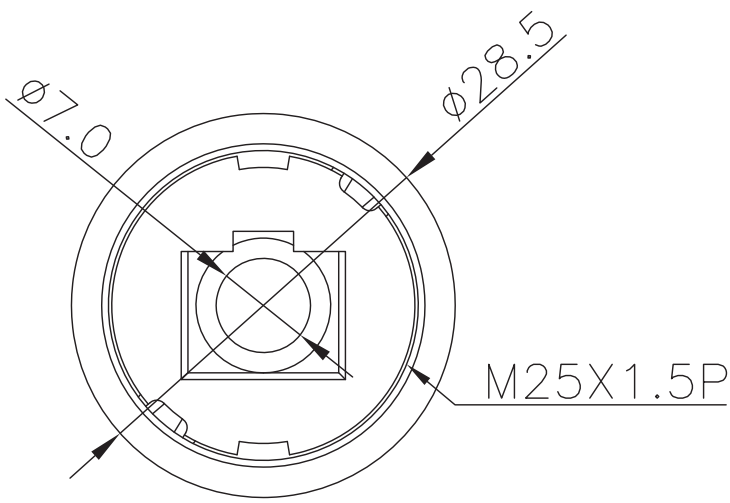

Materials

・**Plastic Housing** : Engineering Thermoplastic.
Flammability Rating UL 94V-0.

PASS RoHS

Ordering Information

3351L-01

Waterproof Cap (IP 68)

PANSTRONG

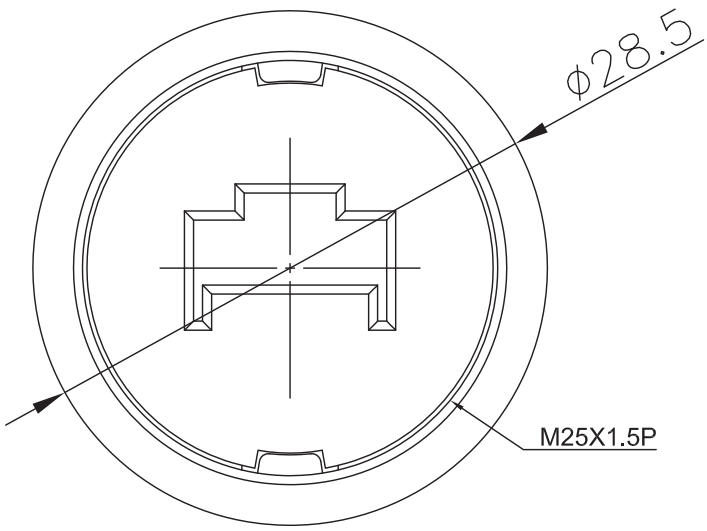

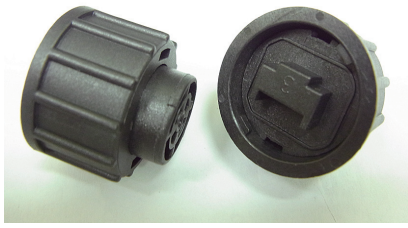

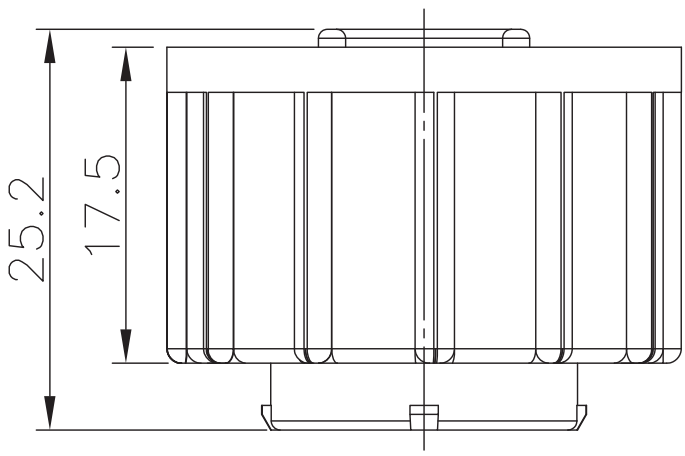

Materials

・**Plastic Housing：** Engineering Thermoplastic.
Flammability Rating UL 94V-0.

PASS PASS PASS PASS PASS PASS PASS PASS
RoHS

Ordering Information

3351A-01

Metal Waterproof RJ45 Cat. 5e Coupler (IP 68)

PANSTRONG

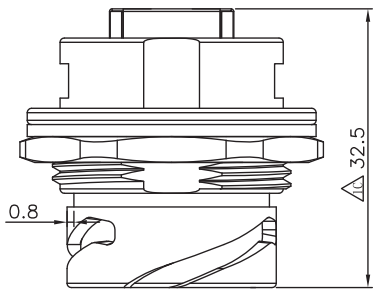

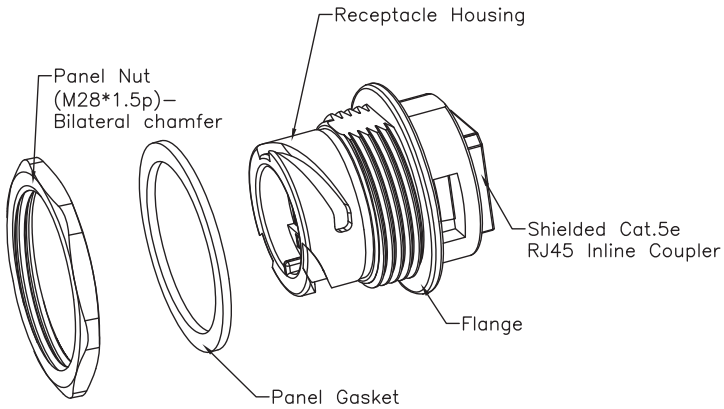

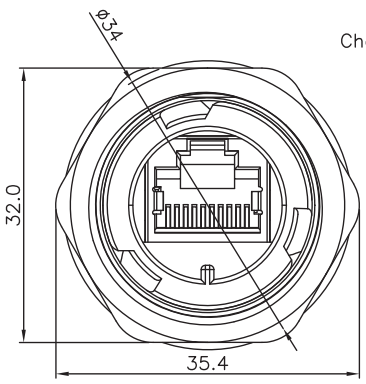

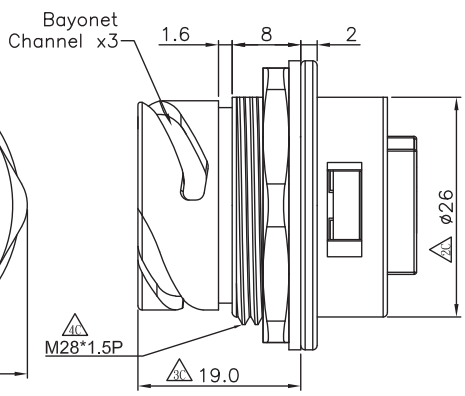

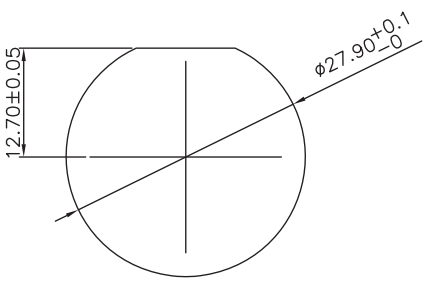

Materials

- **Receptacle Housing** : Zn Alloy 3, Nickel Plated
- **Panel Nut** : Coper Alloy, Nickel Plated
- **Panel Gasket** : Sillcon
- **RJ45 Jack Metal Shell** : Coper Alloy, Nickel Plated
- **RJ45 Jack Plastic Housing** : Engineerng Thermoplastic Flammbility Rating UL94 V-0
- **RJ45 Jack Contact** : Phosphor Bronze, finis : Gold over Nickel

Connector can be front mounted to a maximum panel thickness of 3.2mm.

Ordering Information

3353D00040

Metal Waterproof RJ45 Cat. 6a Coupler (IP 68)

PANSTRONG

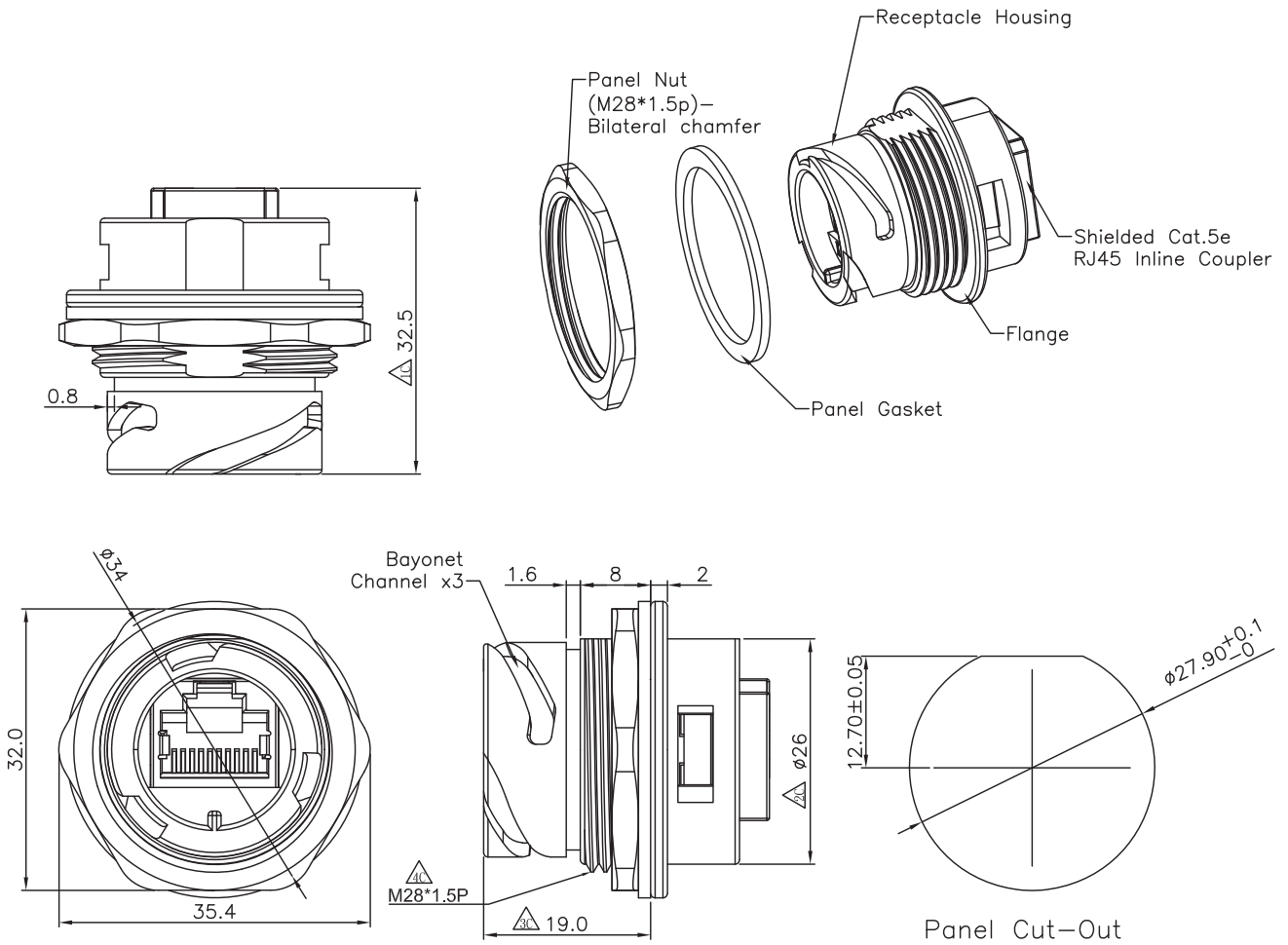

Materials

- **Receptacle Housing** : Zn Alloy 3, Nickel Plated
- **Panel Nut** : Coper Alloy, Nickel Plated
- **Panel Gasket** : Sillcon
- **RJ45 Jack Metal Shell** : Coper Alloy, Nickel Plated
- **RJ45 Jack Plastic Housing** : Engineering Thermoplastic Flammbility Rating UL94 V-0
- **RJ45 Jack Contact** : Phosphor Bronze, finis : Gold over Nickel

Connector can be front mounted to a maximum panel thickness of 3.2mm.

Ordering Information

3353D00140

Metal RJ45 Dip Type (IP 68)

PANSTRONG

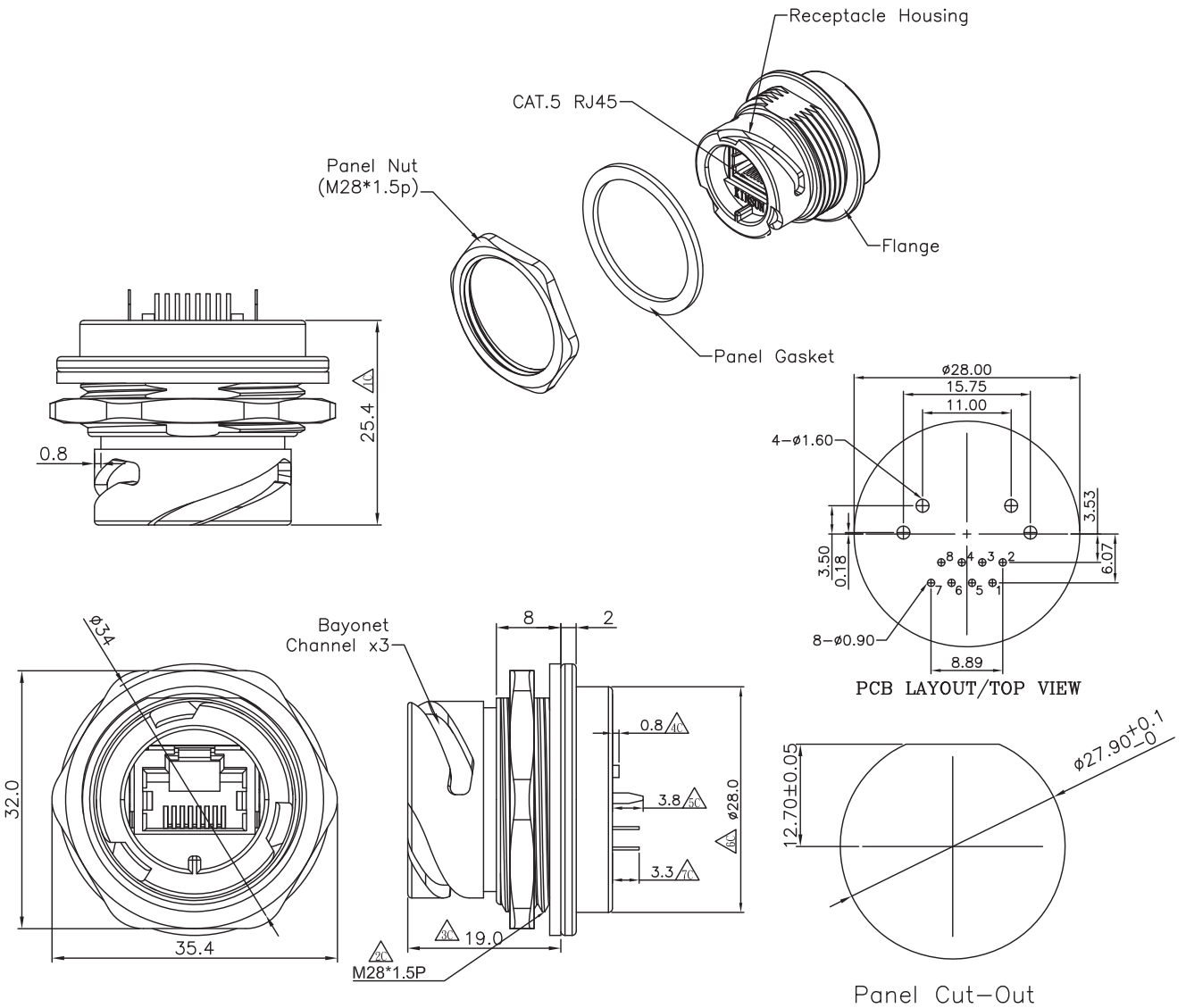

Materials

- **Receptacle Housing** : Zn Alloy 3, Nickel Plated
- **Panel Nut** : Coper Alloy, Nickel Plated
- **Panel Gasket** : Sillcon
- **RJ45 Jack Metal Shell** : Coper Alloy, Nickel Plated
- **RJ45 Jack Plastic Housing** : Engineering Thermoplastic Flammbility Rating UL94 V-0
- **RJ45 Jack Contact** : Phosphor Bronze, finis : Gold over Nickel

Connector can be front mounted to a maximum panel thickness of 3.2mm.

PASS PASS PASS PASS PASS PASS PASS PASS RoHS

Ordering Information

3353E00140

Metal Waterproof RJ45 With PCB (IP 68)

PANSTRONG

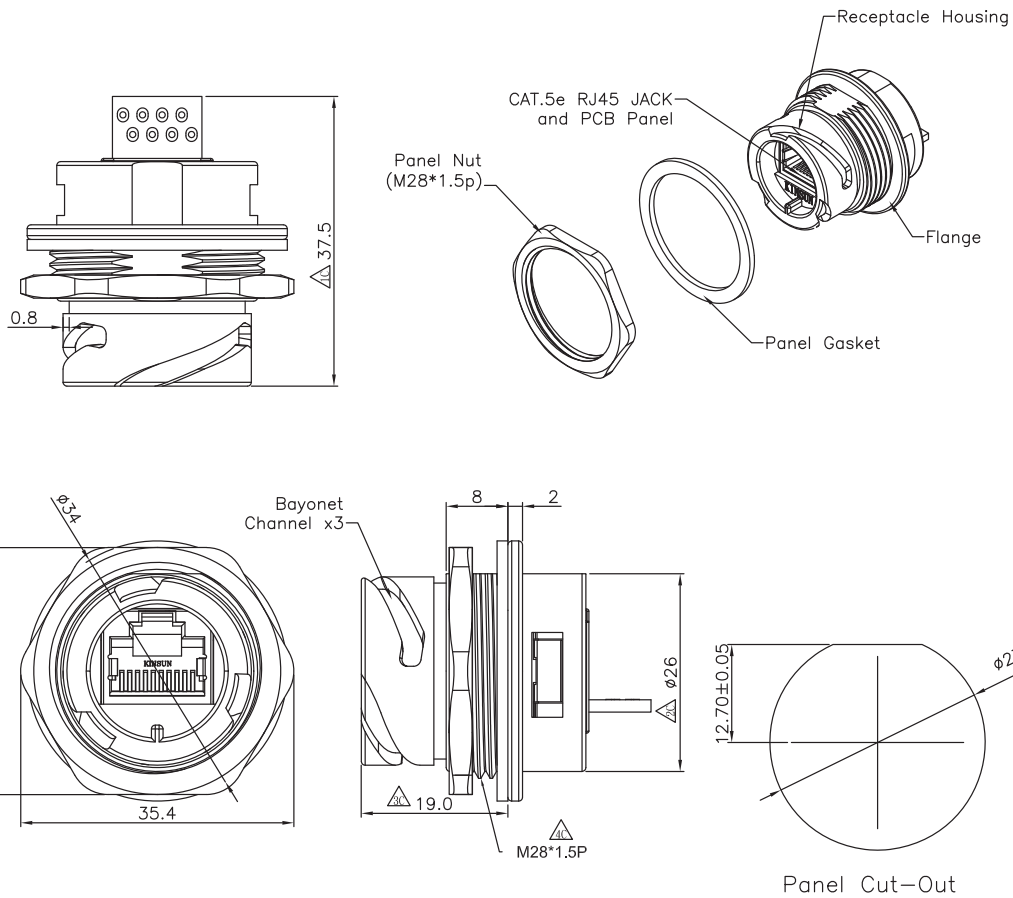

Materials

- **Receptacle Housing** : Zn Alloy 3, Nickel Plated
- **Panel Nut** : Coper Alloy, Nickel Plated
- **Panel Gasket** : Sillcon
- **RJ45 Jack Metal Shell** : Coper Alloy, Nickel Plated
- **RJ45 Jack Plastic Housing** : Engineering Thermoplastic Flammbility Rating UL94 V-0
- **RJ45 Jack Contact** : Phosphor Bronze, finis : Gold over Nickel

Connector can be front mounted to a maximum panel thickness of 3.2mm.

Ordering Information

3353F00040

Metal Waterproof Cat. 5e Jack With IDC (IP 68)

PANSTRONG

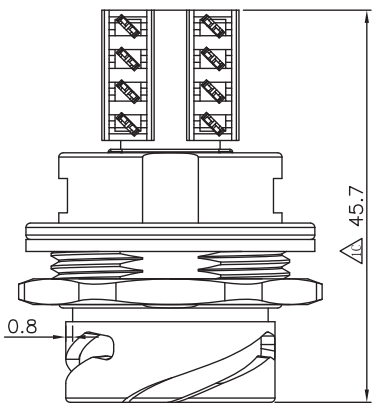

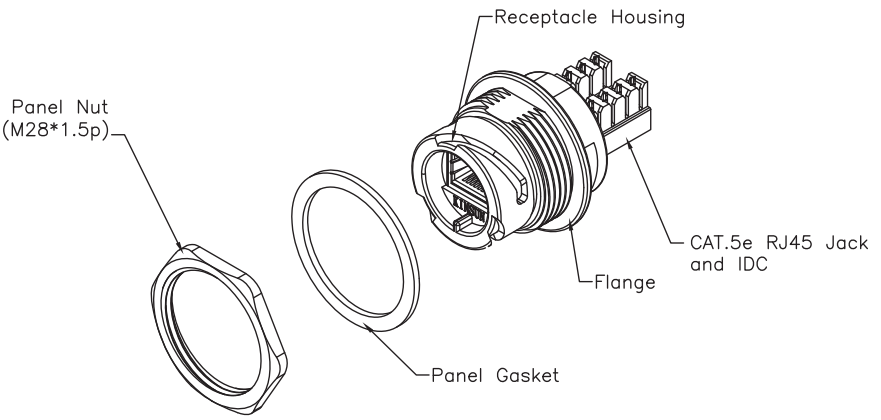

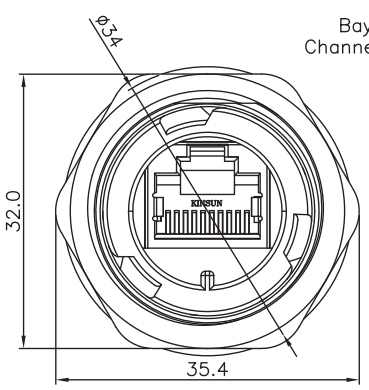

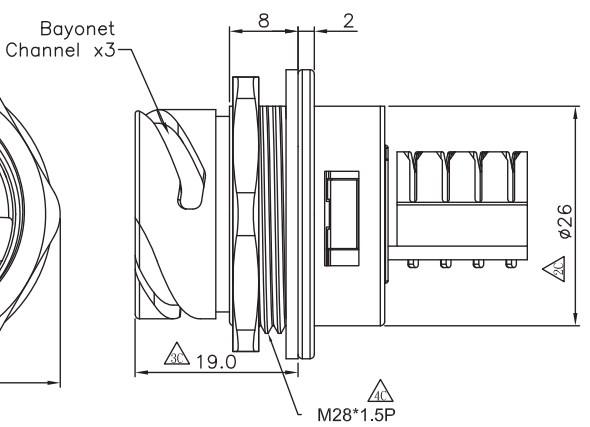

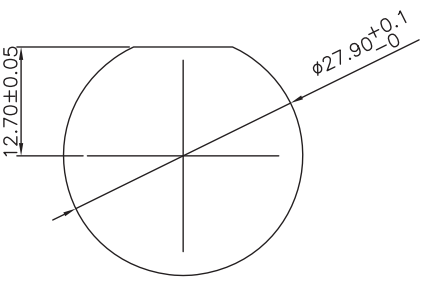

Materials

- **Receptacle Housing** : Zn Alloy 3, Nickel Plated
- **Panel Nut** : Coper Alloy, Nickel Plated
- **Panel Gasket** : Sillcon
- **RJ45 Jack Metal Shell** : Coper Alloy, Nickel Plated
- **RJ45 Jack Plastic Housing** : Engineering Thermoplastic Flammbility Rating UL94 V-0
- **RJ45 Jack Contact** : Phosphor Bronze, finis : Gold over Nickel

Connector can be front mounted to a maximum panel thickness of 3.2mm.

Ordering Information

3353H00040

Metal Waterproof USB/A Coupler (IP 68)

PANSTRONG

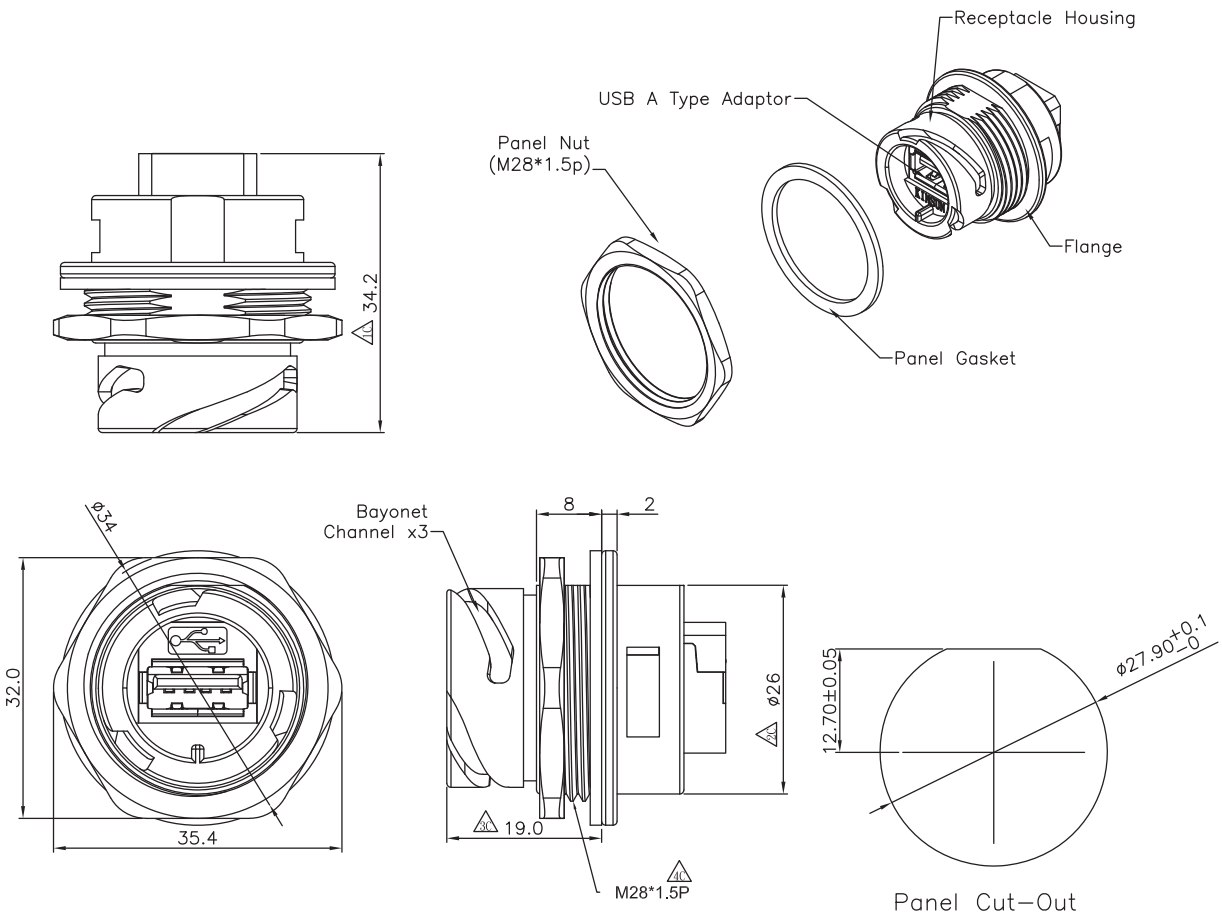

Materials

- **Receptacle Housing** : Zn Alloy 3, Nickel Plated
- **Panel Nut** : Coper Alloy, Nickel Plated
- **Panel Gasket** : Sillcon
- **USB CONN** : USB A Type
- **Contact** : Gold over Nickel

Connector can be front mounted to a maximum panel thickness of 3.2mm.

PASS PASS PASS PASS PASS PASS PASS PASS RoHS

Ordering Information

3353K00030

Metal Waterproof Cable Side (IP 68)

PANSTRONG

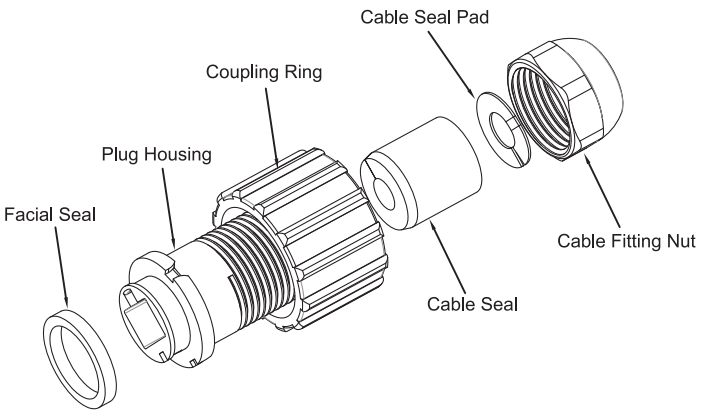

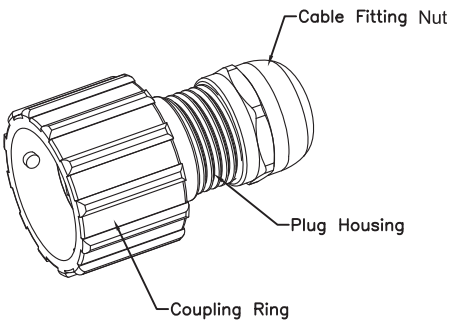

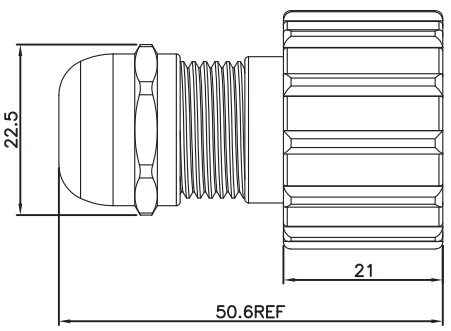

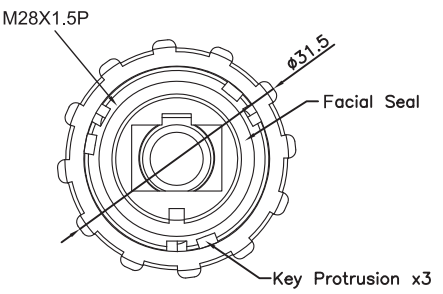

Materials

NAME	SPECIFICATION	QTY	NOTE
Coupling Ring	Zn Alloy 3, Nickel Plated	1	
Plug Housing	Zn Alloy 3, Nickel Plated	1	
Cable Fitting Nut	Coper Alloy, Nickel Plated	1	
Facial Seal	Silicon, Red	1	
Cable Seal	Silicon, Red	1	
Cable Seal Pad	Teflon White	1	

PASS PASS PASS PASS PASS PASS PASS PASS RoHS

Ordering Information

3353L01000

Metal Waterproof Cap With Chain (IP 68)

PANSTRONG

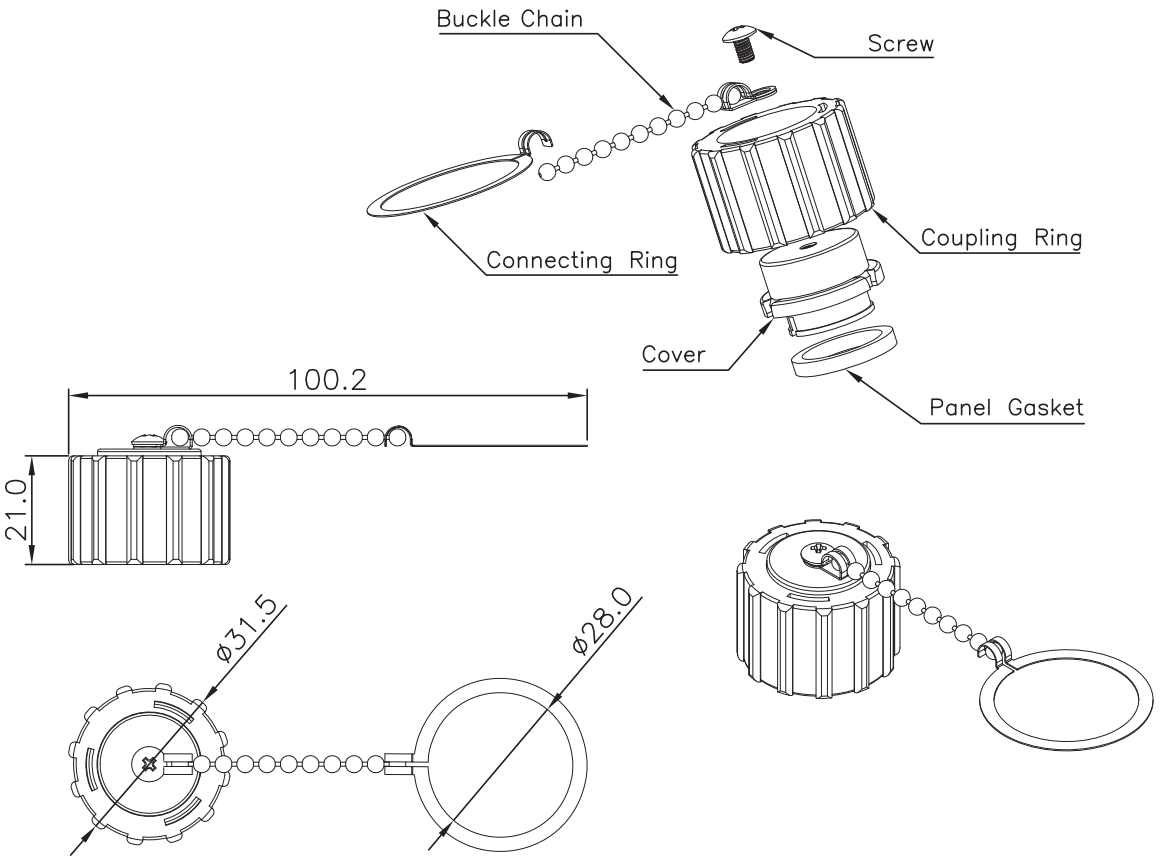

Materials

NAME	SPECIFICATION	QTY
Connecting Ring	Stainless steel	1
Screw	Stainless steel	1
Buckle Chain	Stainless steel	1
Gasket	Silicon	1
Coupling Ring	Zn Alloy 3,Nickel Plated	1
Cover	Zn Alloy 3,Nickel Plated	1

PASS PASS PASS PASS PASS PASS PASS PASS RoHS

Ordering Information

3353A-02

Waterproof M12 Male With M15 Rear Mount (IP 68)

PANSTRONG

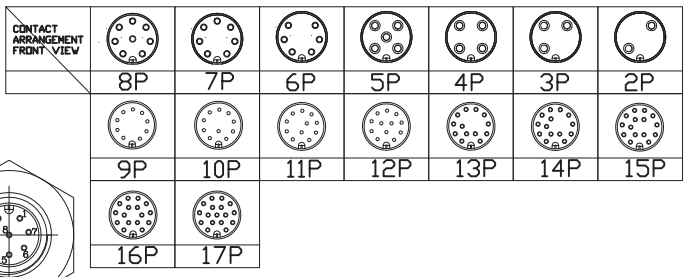

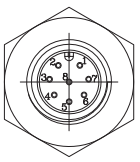

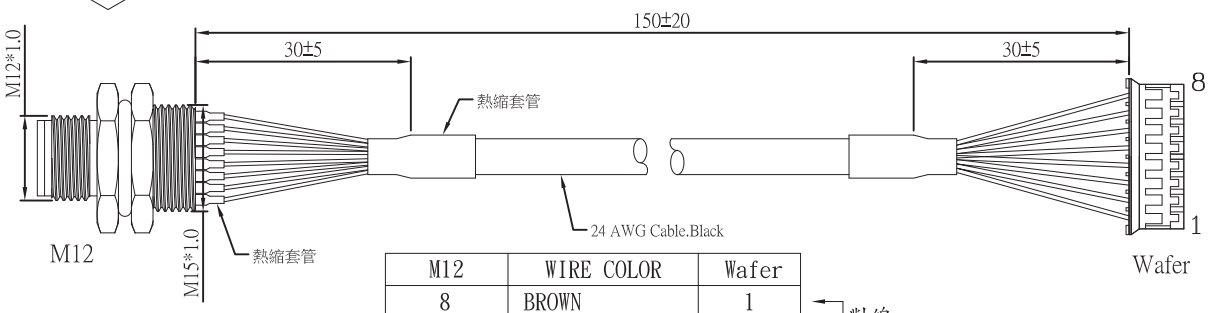

M12	WIRE COLOR	Wafer
8	BROWN	1
7	WHITE/BROWN	2
6	GREEN	3
5	WHITE/BLUE	4
4	BLUE	5
3	WHITE/GREEN	6
2	ORANGE	7
1	WHITE/ORANGE	8

對線
對線 對線
對線

Materials

- **Plastic Housing** : Engineering Thermoplastic Flammability Rating UL 94V-0.
- **Contacts** : Copper Alloy.
- **Plating** : Gold Plating Over Nickel In Contact.
- **O-Ring** : Silicone Rubber Black Color.
- **Shield** : Brass With Nickel Plated
- **Wafer** : UL 94V-0.Color White,8PIN PH=2.0mm
- **Coble** : UL 1007 24AWG,Color Black

PASS RoHS

Ratings and Characteristics

- **Waterproof Rate** : IP68
- **Current Rating** : 4A(2 to 5Pin) 2A(6 to 8Pin) 1.5A(9 to 17Pin)
- **Rated Voltage** : 250V AC/DC(2 to 4Pin)
  60V AC/DC(5Pin) 30V AC/DC(6 to 8Pin)
  30V AC/DC(9 to 12Pin) 30V AC/DC(13 to 17Pin)
- **Insulation Resistance** : 10^8 Min

Ordering Information

4001 A □ C □

- Series No.
- Male Panel mount:M15*1.0
- C=Cable Assembly W=Wire Harness S=For Wire Solder
- Description: Connector Type Wire length ·····
- 2=2Pins A=10Pins 3=3Pins B=11Pins 4=4Pins C=12Pins 5=5Pins D=13Pins 6=6Pins E=14Pins 7=7Pins F=15Pins 8=8Pins G=16Pins 9=9Pins H=17Pins

Waterproof M12 Male With M12 Rear Mount (IP 68)

PANSTRONG

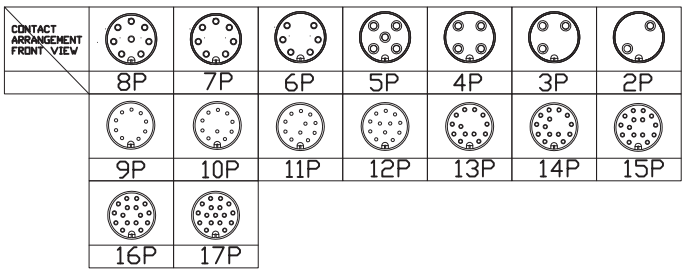

PIN	DESCRPTION	AWG	COLOR
4	COM	26	BLACK
2	N.O.	26	BLUE
3	0V	26	WHITE
1	DC12V	26	BROWN

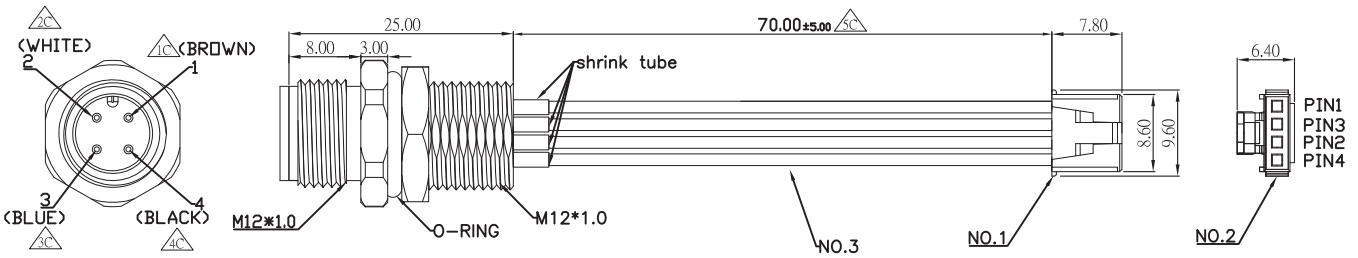

NO	DESCRPTION
1	CONN HOUSING 2.0 WIRE TO BOARD
2	TERM FEML 24-30 AWG
3	UL1430 300V 26AWG

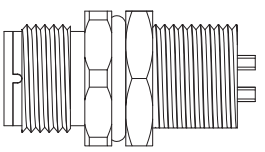

(For wire solder)

Materials

- **Plastic Housing** : Engineering Thermoplastic Flammability Rating UL 94V-0.
- **Contacts** : Copper Alloy.
- **Plating** : Gold Plating Over Nickel In Contact.
- **O-Ring** : Silicone Rubber Black Color.
- **Shielded** : Brass With Nickel Plated.

PASS RoHS

Ratings and Characteristics

- **Waterproof Rate** : IP68
- **Current Rating** : 4A(2 to 5Pin) 2A(6 to 8Pin) 1.5A(9 to 17Pin)
- **Rated Voltage** : 250V AC/DC(2 to 4Pin)
  60V AC/DC(5Pin) 30V AC/DC(6 to 8Pin)
  30V AC/DC(9 to 12Pin) 30V AC/DC(13 to 17Pin)
- **Insulation Resistance** : 10^8 Min

Ordering Information

4001 B □ W □

- 4001: Series No.
- B: Male, Panel mount:M12*1.0
- □: C=Cable Assembly, W=Wire Harness, S=For Wire Solder
- W: Description: Connector Type, Wire length .....
- □: 2=2Pins A=10Pins, 3=3Pins B=11Pins, 4=4Pins C=12Pins, 5=5Pins D=13Pins, 6=6Pins E=14Pins, 7=7Pins F=15Pins, 8=8Pins G=16Pins, 9=9Pins H=17Pins

Waterproof M12 Female With M16 Rear Mount (IP 68)

PANSTRONG

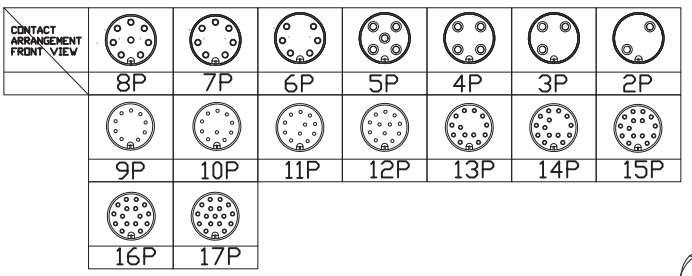

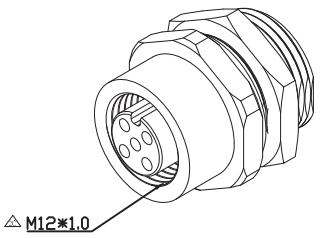

P1	WIRE COLOR
1	BROWN
2	WHITE
3	BLUE
4	BLACK
5	GRAY

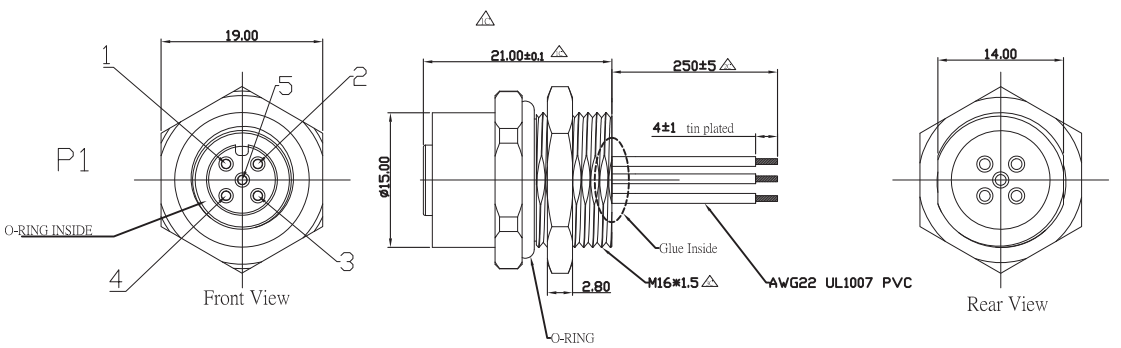

Materials

- **Plastic Housing** : Engineering Thermoplastic Flammability Rating UL 94V-0.
- **Contacts** : Copper Alloy.
- **Plating** : Gold Plating Over Nickel In Contact.
- **O-Ring** : Silicone Rubber Black Color.
- **Shield** : Brass With Nickel Plated.

PASS RoHS

Ratings and Characteristics

- **Waterproof Rate** : IP68
- **Current Rating** : 4A(2 to 5Pin) 2A(6 to 8Pin) 1.5A(9 to 17Pin)
- **Rated Voltage** : 250V AC/DC(2 to 4Pin)
  60V AC/DC(5Pin) 30V AC/DC(6 to 8Pin)
  30V AC/DC(9 to 12Pin) 30V AC/DC(13 to 17Pin)
- **Insulation Resistance** : 10^8 Min

Ordering Information

4001 N □ W □

- Series No.
- Female Panel mount:M16
- C=Cable Assembly
  W=Wire Harness
  S=For Wire Solder
- Description: Connector Type Wire length .....
- 2=2Pins A=10Pins
  3=3Pins B=11Pins
  4=4Pins C=12Pins
  5=5Pins D=13Pins
  6=6Pins E=14Pins
  7=7Pins F=15Pins
  8=8Pins G=16Pins
  9=9Pins H=17Pins

Waterproof M12 Male With PG9 Front Mount Dip Type (IP 68)

PANSTRONG

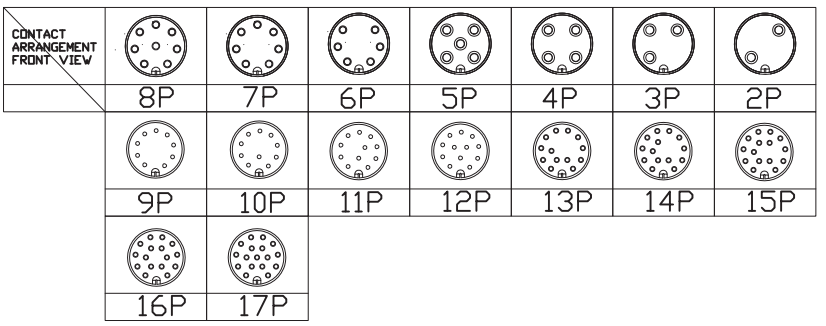

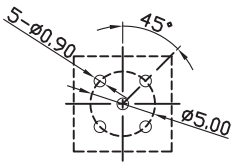

PCB Cut-out

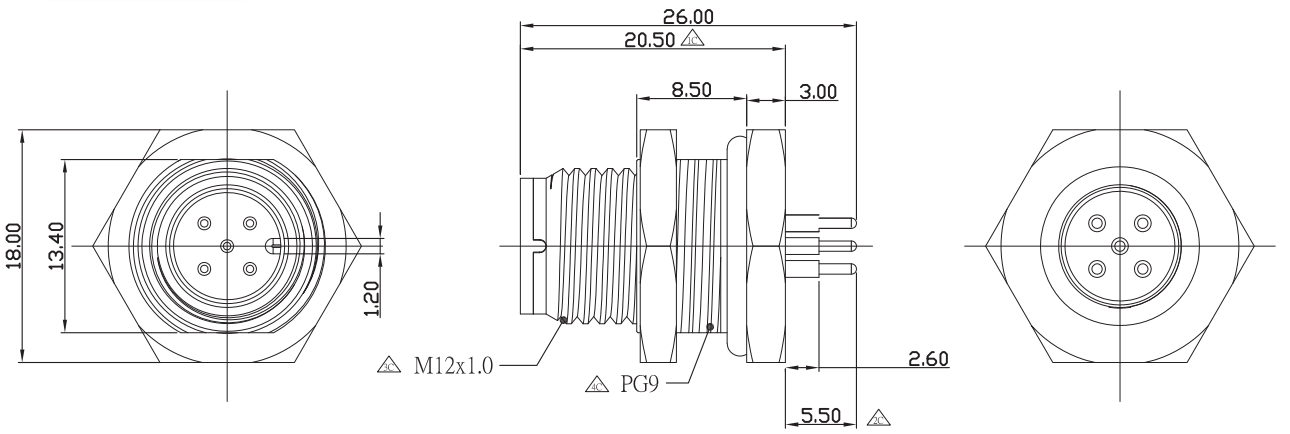

Materials

- **Plastic Housing** : Engineering Thermoplastic Flammability Rating UL 94V-0.
- **Contacts** : Copper Alloy.
- **Plating** : Gold Plating Over Nickel In Contact.
- **O-Ring** : Silicone Rubber Black Color.
- **Shield** : Brass With Nickel Plated.

PASS RoHS

Ratings and Characteristics

- **Waterproof Rate** : IP68
- **Current Rating** : 4A(2 to 5Pin) 2A(6 to 8Pin) 1.5A(9 to 17Pin)
- **Rated Voltage** : 250V AC/DC(2 to 4Pin)
  60V AC/DC(5Pin) 30V AC/DC(6 to 8Pin)
  30V AC/DC(9 to 12Pin) 30V AC/DC(13 to 17Pin)
- **Insulation Resistance** : 10^8 Min

Ordering Information

4002 B □

Series No.

Male
Panel mount:PG9

2=2Pins A=10Pins
3=3Pins B=11Pins
4=4Pins C=12Pins
5=5Pins D=13Pins
6=6Pins E=14Pins
7=7Pins F=15Pins
8=8Pins G=16Pins
9=9Pins H=17Pins

Waterproof M12 Male With PG9 Front Mount (IP 68)

PANSTRONG

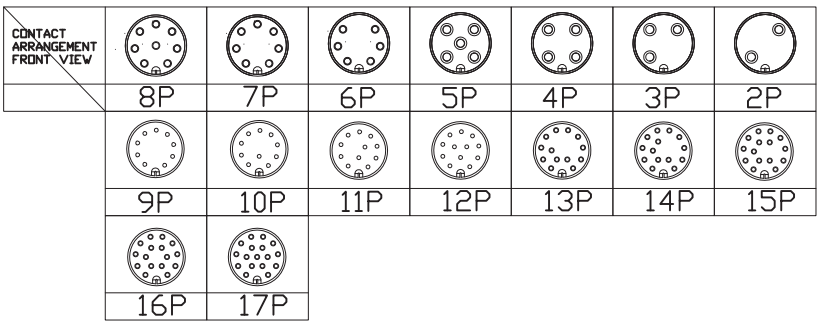

P1線端	WIRE COLOR	P2線端
1	BLACK/WHITE	1
2	BROWN/WHITE	2
3	BLACK	3
4	GRAY	4
5	WHITE	5
6	BROWN	6
7	ORANGE	7
8	BLUE	8
9	YELLOW	9
10	GREEN	10
11	PURPLE	11
12	RED	12

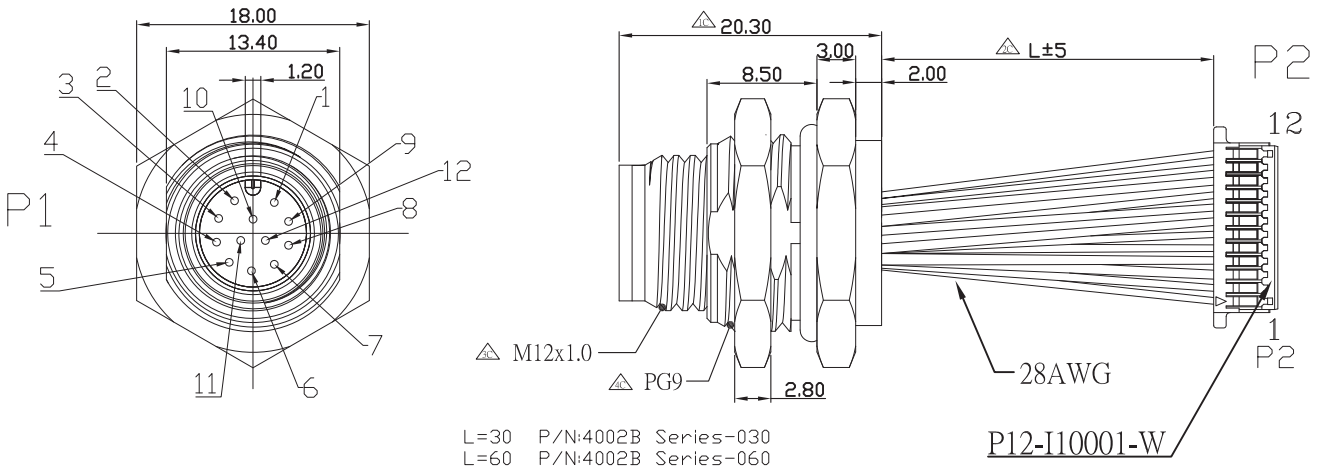

Materials

- **Plastic Housing** : Engineering Thermoplastic Flammability Rating UL 94V-0.
- **Contacts** : Copper Alloy.
- **Plating** : Gold Plating Over Nickel In Contact.
- **O-Ring** : Silicone Rubber Black Color.
- **Shield** : Brass With Nickel Plated.

PASS RoHS

Ratings and Characteristics

- **Waterproof Rate** : IP68
- **Current Rating** : 4A(2 to 5Pin) 2A(6 to 8Pin) 1.5A(9 to 17Pin)
- **Rated Voltage** : 250V AC/DC(2 to 4Pin)
  60V AC/DC(5Pin) 30V AC/DC(6 to 8Pin)
  30V AC/DC(9 to 12Pin) 30V AC/DC(13 to 17Pin)
- **Insulation Resistance** : 10^8 Min

Ordering Information

4002 B □ W □

- 4002: Series No.
- B: Female Panel mount:PG9
- □: 2=2Pins A=10Pins, 3=3Pins B=11Pins, 4=4Pins C=12Pins, 5=5Pins D=13Pins, 6=6Pins E=14Pins, 7=7Pins F=15Pins, 8=8Pins G=16Pins, 9=9Pins H=17Pins
- W: C=Cable Assembly, W=Wire Harness, S=For Wire Solder
- □: Description: Connector Type, Wire length .....

Waterproof M12 Male With M12 Front Mount Dip Type (IP 68)

PANSTRONG

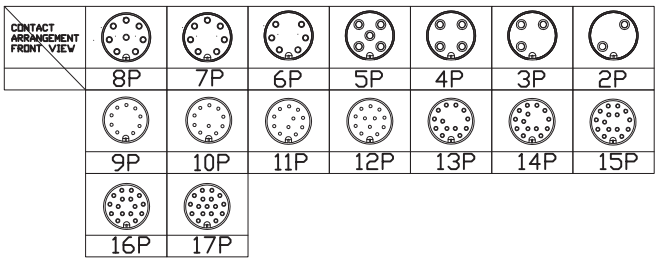

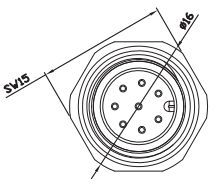

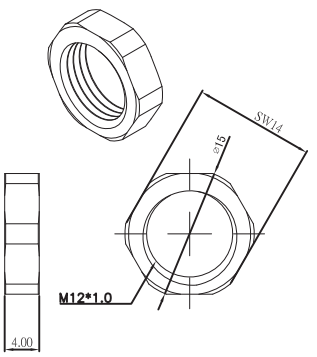

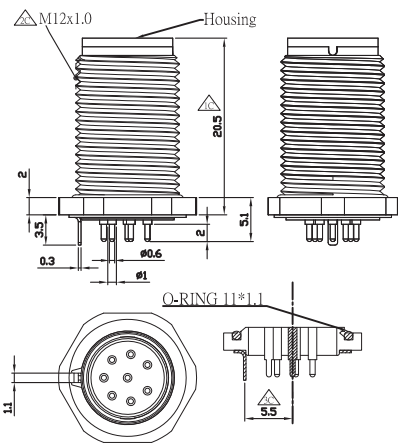

Materials

- **Plastic Housing** : Engineering Thermoplastic Flammability Rating UL 94V-0.
- **Contacts** : Copper Alloy.
- **Plating** : Gold Plating Over Nickel In Contact.
- **O-Ring** : Silicone Rubber Black Color.
- **Shield** : Brass With Nickel Plated.

PASS PASS PASS PASS PASS PASS PASS PASS RoHS

Ratings and Characteristics

- **Waterproof Rate** : IP68
- **Current Rating** : 4A(2 to 5Pin) 2A(6 to 8Pin) 1.5A(9 to 17Pin)
- **Rated Voltage** : 250V AC/DC(2 to 4Pin)
  60V AC/DC(5Pin) 30V AC/DC(6 to 8Pin)
  30V AC/DC(9 to 12Pin) 30V AC/DC(13 to 17Pin)
- **Insulation Resistance** : 10^8 Min

Ordering Information

4002 D □

Series No.

Male
Panel mount:M12

2=2Pins A=10Pins
3=3Pins B=11Pins
4=4Pins C=12Pins
5=5Pins D=13Pins
6=6Pins E=14Pins
7=7Pins F=15Pins
8=8Pins G=16Pins
9=9Pins H=17Pins

Waterproof M12 Male With M12 Front Mount (IP 68)

PANSTRONG

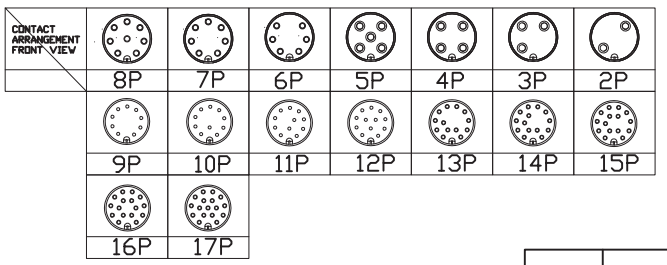

NO	DESCRPTION
1	CONN HOUSING 3.5 WIRE TO BOARD 2P
2	TERM FEML 24–28 AWG PHO–BR/TIN
3	UL1430 300V 26AWG

PIN	DESCRPTION	AWG	COLOR
1	VCC +	24	RED
3	GND	24	BLACK
2.4.5	NC		

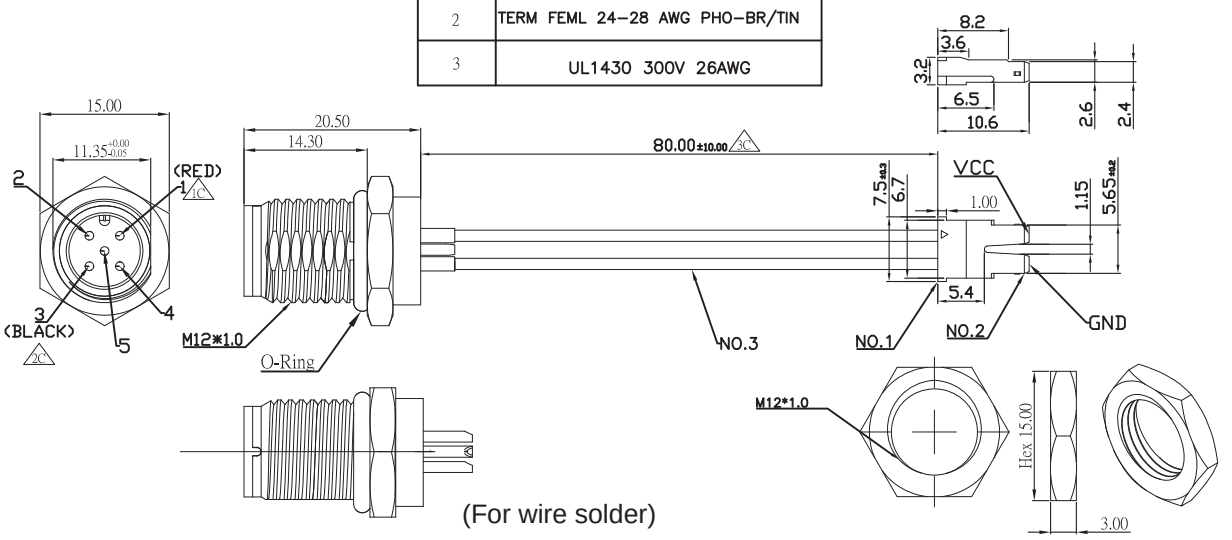

(For wire solder)

Materials

Plastic Housing : Engineering Thermoplastic
Flammability Rating UL 94V-0.

- **Contacts** : Copper Alloy.
- **Plating** : Gold Plating Over Nickel In Contact.
- **O-Ring** : Silicone Rubber Black Color.
- **Shield** : Brass With Nickel Plated.

PASS RoHS

Ratings and Characteristics

- **Waterproof Rate** : IP68
- **Current Rating** : 4A(2 to 5Pin) 2A(6 to 8Pin) 1.5A(9 to 17Pin)
- **Rated Voltage** : 250V AC/DC(2 to 4Pin)
  60V AC/DC(5Pin) 30V AC/DC(6 to 8Pin)
  30V AC/DC(9 to 12Pin) 30V AC/DC(13 to 17Pin)
- **Insulation Resistance** : 10^8 Min

Ordering Information

4002 D □ W □

Series No.

Female
Panel mount:M12

C=Cable Assembly
W=Wire Harness
S=For Wire Solder

Description:
Connector Type
Wire length
.....

2=2Pins A=10Pins
3=3Pins B=11Pins
4=4Pins C=12Pins
5=5Pins D=13Pins
6=6Pins E=14Pins
7=7Pins F=15Pins
8=8Pins G=16Pins
9=9Pins H=17Pins

Waterproof M12 Female With M15 Front Mount Dip Type (IP 68)

PANSTRONG

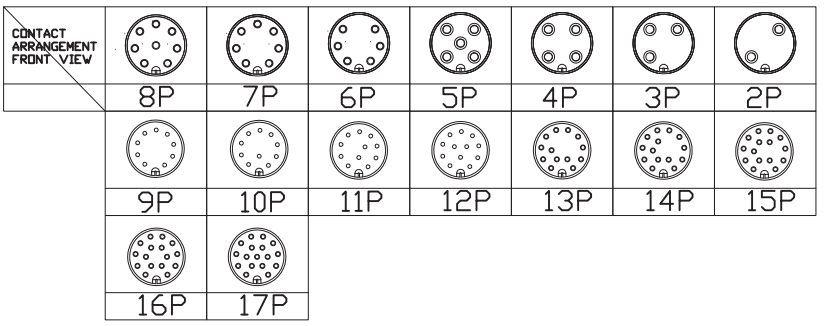

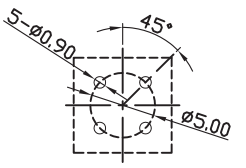

PCB Cut-out

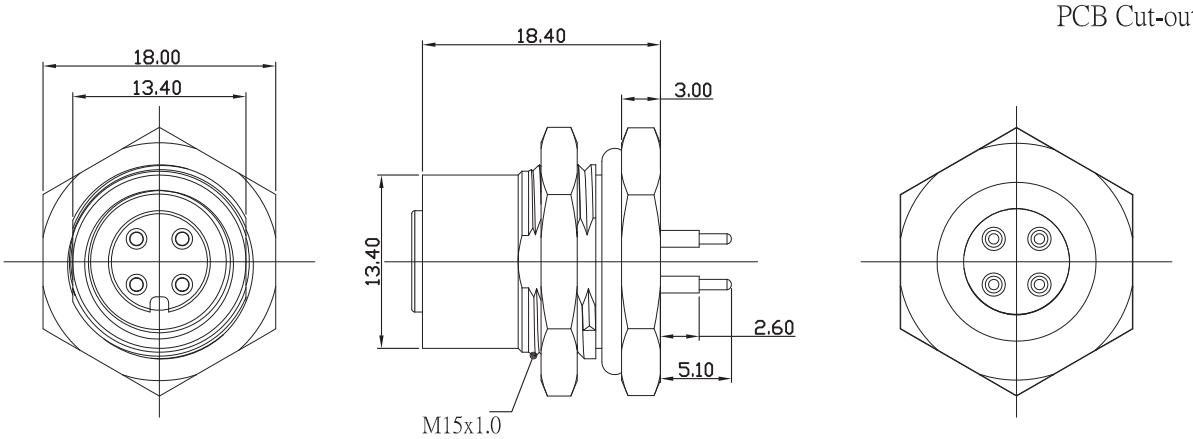

Materials

- **Plastic Housing** : Engineering Thermoplastic Flammability Rating UL 94V-0.
- **Contacts** : Copper Alloy.
- **Plating** : Gold Plating Over Nickel In Contact.
- **O-Ring** : Silicone Rubber Black Color.
- **Shield** : Brass With Nickel Plated.

PASS RoHS

Ratings and Characteristics

- **Waterproof Rate** : IP68
- **Current Rating** : 4A(2 to 5Pin) 2A(6 to 8Pin) 1.5A(9 to 17Pin)
- **Rated Voltage** : 250V AC/DC(2 to 4Pin)
  60V AC/DC(5Pin) 30V AC/DC(6 to 8Pin)
  30V AC/DC(9 to 12Pin) 30V AC/DC(13 to 17Pin)
- **Insulation Resistance** : 10^8 Min

Ordering Information

4002 N □

Series No.

Female
Panel mount:M15*1.0

2=2Pins A=10Pins
3=3Pins B=11Pins
4=4Pins C=12Pins
5=5Pins D=13Pins
6=6Pins E=14Pins
7=7Pins F=15Pins
8=8Pins G=16Pins
9=9Pins H=17Pins

Waterproof M12 Male With M15 Front Mount (IP 68)

PANSTRONG

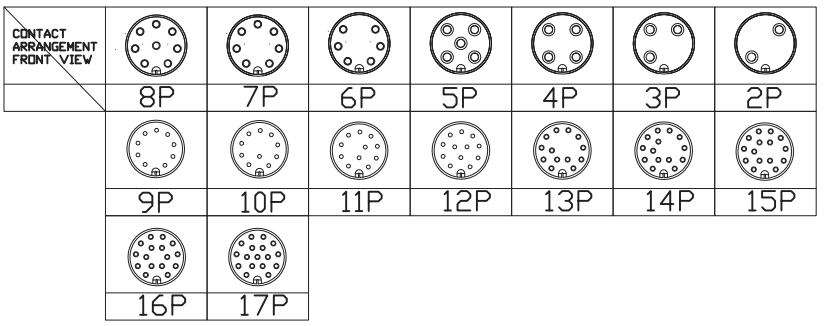

P1	WIRE COLOR
1	BROWN
2	WHITE
3	BLUE
4	BLACK
5	GRAY

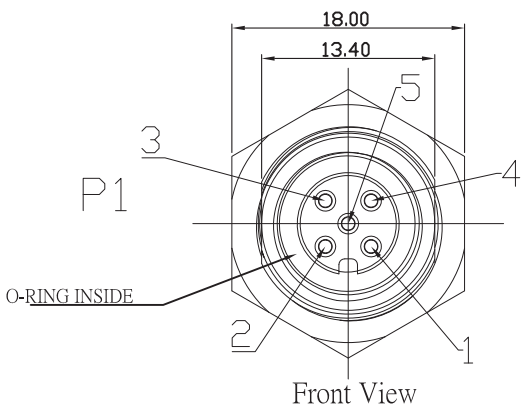

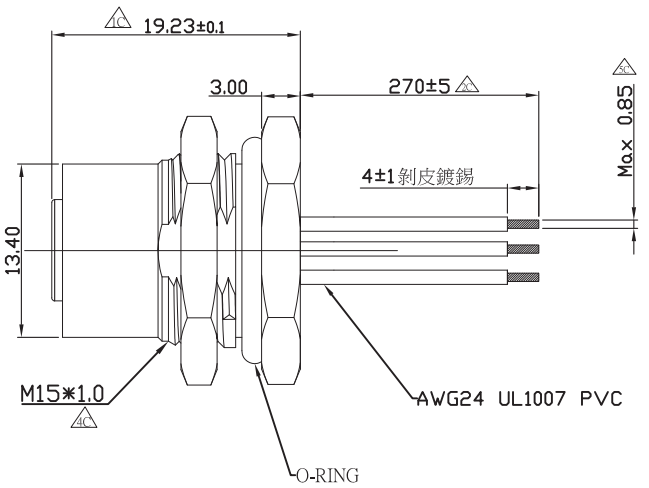

Materials

- **Plastic Housing** : Engineering Thermoplastic Flammability Rating UL 94V-0.
- **Contacts** : Copper Alloy.
- **Plating** : Gold Plating Over Nickel In Contact.
- **O-Ring** : Silicone Rubber Black Color.
- **Shield** : Brass With Nickel Plated.

PASS RoHS

Ratings and Characteristics

- **Waterproof Rate** : IP68
- **Current Rating** : 4A(2 to 5Pin) 2A(6 to 8Pin) 1.5A(9 to 17Pin)
- **Rated Voltage** : 250V AC/DC(2 to 4Pin)
  60V AC/DC(5Pin) 30V AC/DC(6 to 8Pin)
  30V AC/DC(9 to 12Pin) 30V AC/DC(13 to 17Pin)
- **Insulation Resistance** : 10^8 Min

Ordering Information

4002 N □ W □

- Series No.
- Female Panel mount:M15
- C=Cable Assembly
  W=Wire Harness
  S=For Wire Solder
- Description: Connector Type Wire length .....
- 2=2Pins A=10Pins
  3=3Pins B=11Pins
  4=4Pins C=12Pins
  5=5Pins D=13Pins
  6=6Pins E=14Pins
  7=7Pins F=15Pins
  8=8Pins G=16Pins
  9=9Pins H=17Pins

Waterproof M12 Male With Cable (IP 68)

PANSTRONG

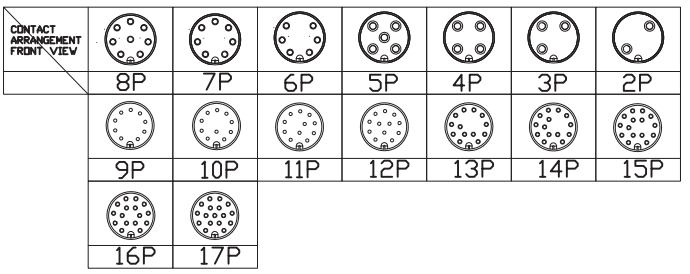

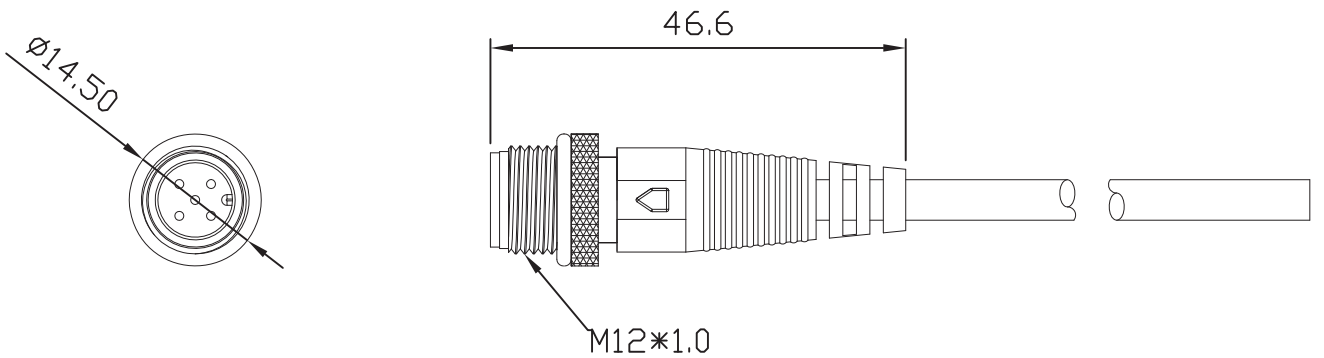

Materials

- **Plastic Housing** : Engineering Thermoplastic Flammability Rating UL 94V-0.
- **Contacts** : Copper Alloy.
- **Plating** : Gold Plating Over Nickel In Contact.
- **O-Ring** : Silicone Rubber Black Color.
- **Shielded** : Brass With Nickel Plated.
- **Coupling Nut** : M12*1 Brass Wtth Nickel Plated
- **Cable** : UL2464 22AWG,OD5.4mm,Color Black

PASS PASS PASS PASS PASS PASS PASS PASS RoHS

Ratings and Characteristics

- **Waterproof Rate** : IP68
- **Current Rating** : 4A(2 to 5Pin) 2A(6 to 8Pin) 1.5A(9 to 17Pin)
- **Rated Voltage** : 250V AC/DC(2 to 4Pin)
  60V AC/DC(5Pin) 30V AC/DC(6 to 8Pin)
  30V AC/DC(9 to 12Pin) 30V AC/DC(13 to 17Pin)
- **Insulation Resistance** : 10^8 Min

Ordering Information

4006 A □ □

Series No.

A:Male

Description:
Connector Type
Wire length
.....

2=2Pins A=10Pins
3=3Pins B=11Pins
4=4Pins C=12Pins
5=5Pins D=13Pins
6=6Pins E=14Pins
7=7Pins F=15Pins
8=8Pins G=16Pins
9=9Pins H=17Pins

Waterproof M12 Female With Cable (IP 68)

PANSTRONG

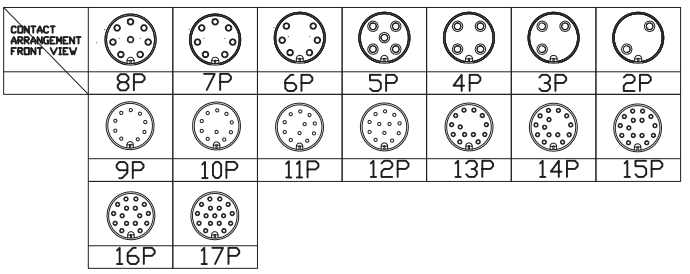

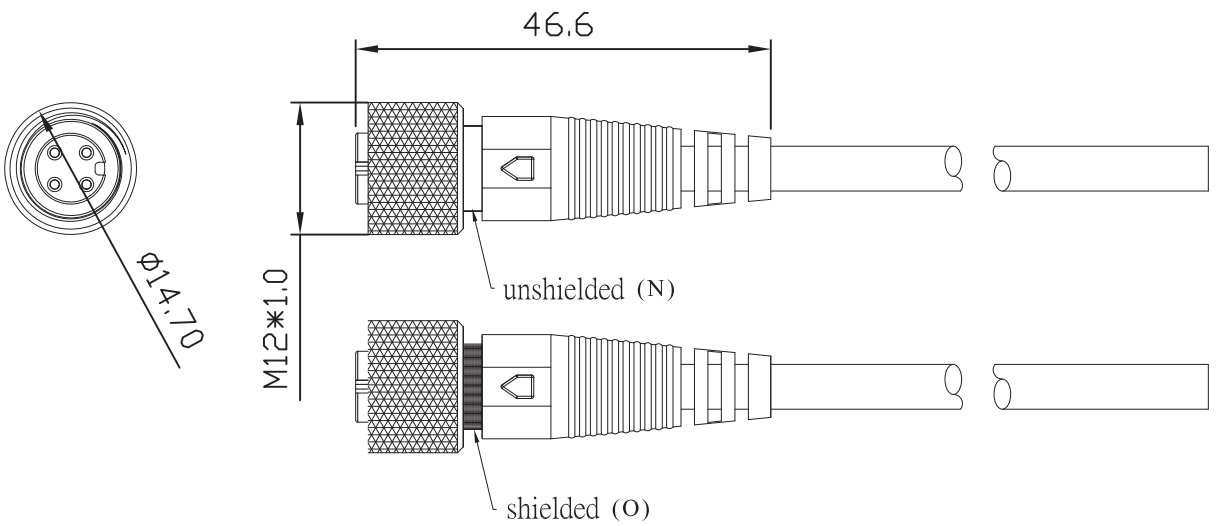

Materials

- **Plastic Housing** : Engineering Thermoplastic Flammability Rating UL 94V-0.
- **Contacts** : Copper Alloy.
- **Plating** : Gold Plating Over Nickel In Contact.
- **O-Ring** : Silicone Rubber Black Color.
- **Shielded** : Brass With Nickel Plated.
- **Coupling Nut** : M12*1 Brass Wtth Nickel Plated
- **Cable** : UL2464 22AWG,OD5.4mm,Color Black

PASS RoHS

Ratings and Characteristics

- **Waterproof Rate** : IP68
- **Current Rating** : 4A(2 to 5Pin) 2A(6 to 8Pin) 1.5A(9 to 17Pin)
- **Rated Voltage** : 250V AC/DC(2 to 4Pin)
  60V AC/DC(5Pin) 30V AC/DC(6 to 8Pin)
  30V AC/DC(9 to 12Pin) 30V AC/DC(13 to 17Pin)
- **Insulation Resistance** : 10^8 Min

Ordering Information

4006 N □ □

Series No.

N:Female
O:Female shielded

Description:
Connector Type
Wire length
.....

2=2Pins A=10Pins
3=3Pins B=11Pins
4=4Pins C=12Pins
5=5Pins D=13Pins
6=6Pins E=14Pins
7=7Pins F=15Pins
8=8Pins G=16Pins
9=9Pins H=17Pins

Waterproof M12 Female Right Angle With Cable (IP 68)

PANSTRONG

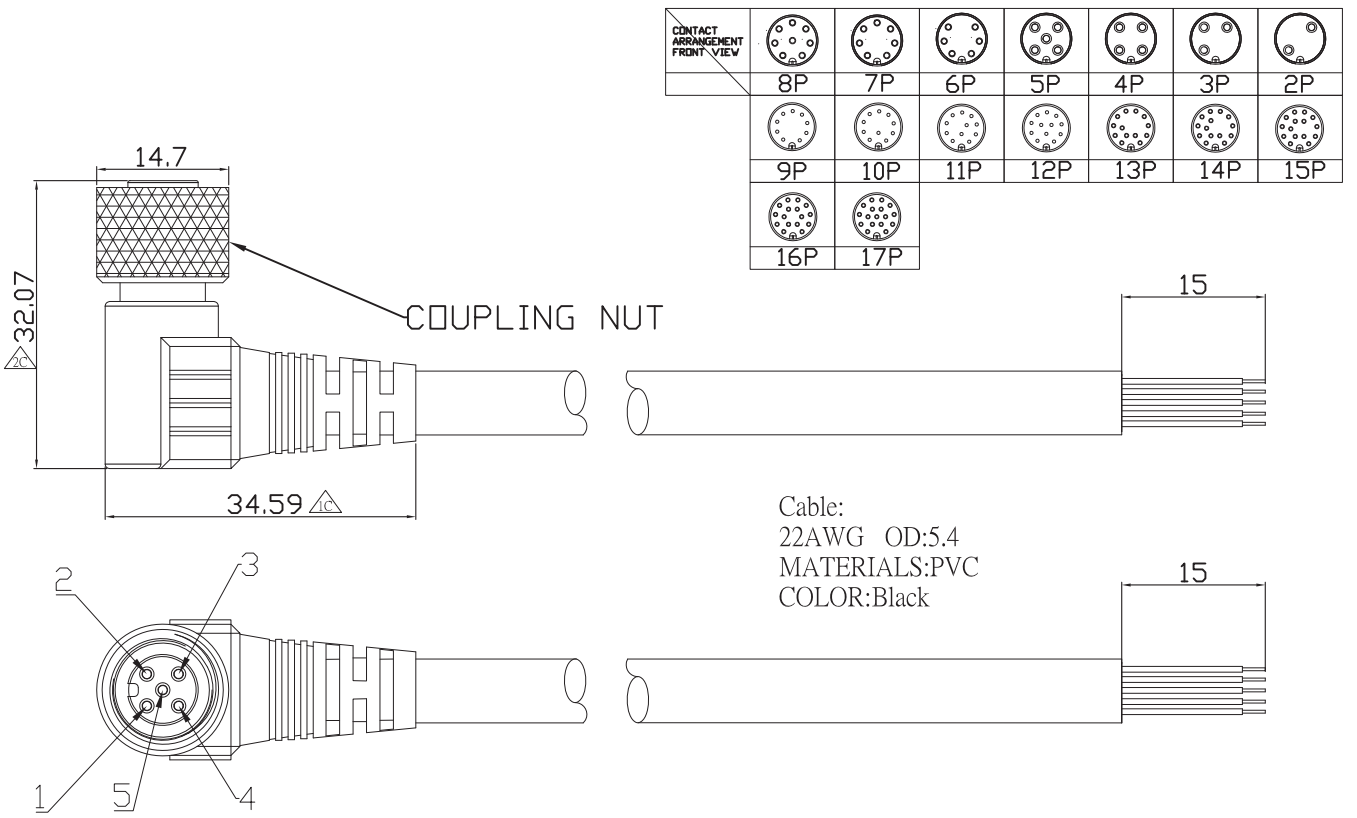

Materials

- **Plastic Housing** : Engineering Thermoplastic Flammability Rating UL 94V-0.
- **Contacts** : Copper Alloy.
- **Plating** : Gold Plating Over Nickel In Contact.
- **O-Ring** : Silicone Rubber Black Color.
- **Shielded** : Brass With Nickel Plated.
- **Coupling Nut** : M12*1 Brass Wtth Nickel Plated

PASS RoHS

Ratings and Characteristics

- **Waterproof Rate** : IP68
- **Current Rating** : 4A(2 to 5Pin) 2A(6 to 8Pin) 1.5A(9 to 17Pin)
- **Rated Voltage** : 250V AC/DC(2 to 4Pin)
  60V AC/DC(5Pin) 30V AC/DC(6 to 8Pin)
  30V AC/DC(9 to 12Pin) 30V AC/DC(13 to 17Pin)
- **Insulation Resistance** : 10^8 Min

Ordering Information

4006 NR □ □

Series No.

NR:Female Right Angle

Description:
Connector Type
Wire length
.....

2=2Pins A=10Pins
3=3Pins B=11Pins
4=4Pins C=12Pins
5=5Pins D=13Pins
6=6Pins E=14Pins
7=7Pins F=15Pins
8=8Pins G=16Pins
9=9Pins H=17Pins

Waterproof M12 Female for USB (IP 68)

PANSTRONG

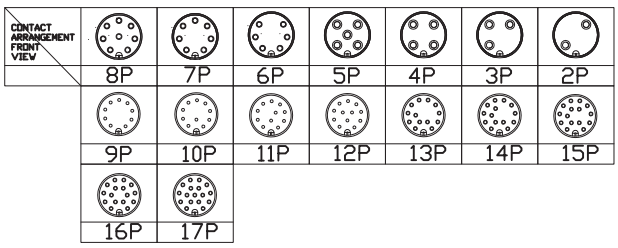

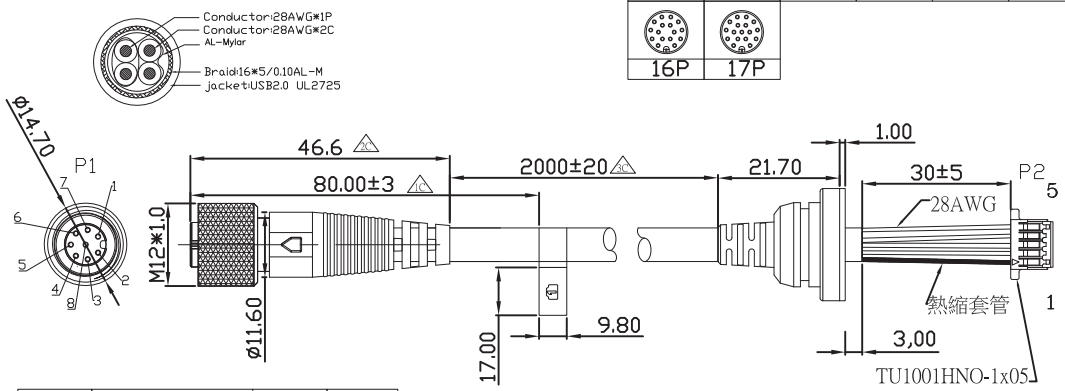

P1	WIRE COLOR	P2	
1	BLACK	1	SHIELDED
2	BLACK	2	GND
3	RED	3	VCC
4	GREEN	4	D+
5	WHITE	5	D-
6			
7			
8			

Materials

- **Plastic Housing** : Engineering Thermoplastic Flammability Rating UL 94V-0.
- **Contacts** : Copper Alloy.
- **Plating** : Gold Plating Over Nickel In Contact.
- **O-Ring** : Silicone Rubber Black Color.
- **Shielded** : Brass With Nickel Plated.
- **Coupling Nut** : M12*1 Brass Wtth Nickel Plated

PASS RoHS

Ratings and Characteristics

- **Waterproof Rate** : IP68
- **Current Rating** : 4A(2 to 5Pin) 2A(6 to 8Pin) 1.5A(9 to 17Pin)
- **Rated Voltage** : 250V AC/DC(2 to 4Pin)
  60V AC/DC(5Pin) 30V AC/DC(6 to 8Pin)
  30V AC/DC(9 to 12Pin) 30V AC/DC(13 to 17Pin)
- **Insulation Resistance** : 10^8 Min

Ordering Information

4006N80200-2000

Waterproof M12 Female for Wifi & GPS (IP 68)

PANSTRONG

P1線端	WIRE COLOR	P2線端	
1	BLACK/WHITE	1	MICN
2	BROWN/WHITE	2	MICP
3	BLACK	3	GND
4	GRAY	4	BUZZER
5	WHITE	5	PWR_KEY
6	BROWN	6	REC_KEY
7	ORANGE	7	REC_LED
8	BLUE	8	SOS_LED
9	YELLOW	9	WIFI_LED
10	GREEN	10	PWR_LED
11	PURPLE	11	3.3V
12	RED	12	VSYS

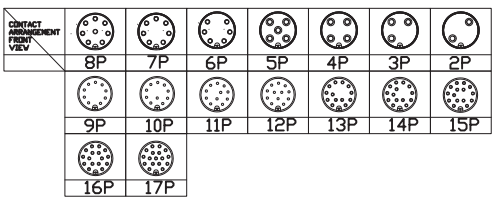

NO	Description
1	SMA Male for RG-174&316 Cable
3	HEAT SHRINK TUBE Ø3.5
4	Standard Coaxial Cable RG-174
5	MHF Compatible Connector

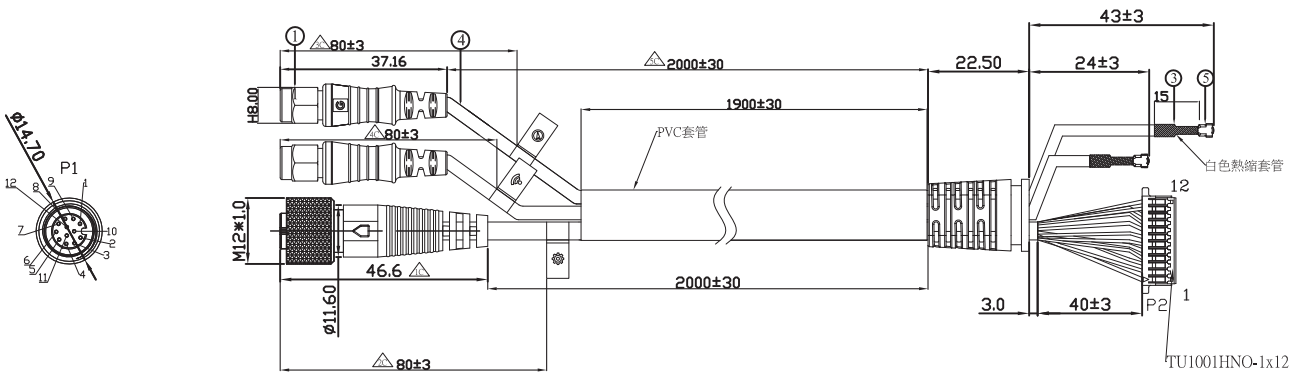

Cable:
12C 28AWG OD:Φ4mm
MATERIALS:PVC
COLOR:Black

Materials

- **Plastic Housing** : Engineering Thermoplastic
  Flammability Rating UL 94V-0.
- **Contacts** : Copper Alloy.
- **Plating** : Gold Plating Over Nickel In Contact.
- **O-Ring** : Silicone Rubber Black Color.
- **Shielded** : Brass With Nickel Plated.
- **Coupling Nut** : M12*1 Brass Wtth Nickel Plated

PASS RoHS

Ratings and Characteristics

- **Waterproof Rate** : IP68
- **Current Rating** : 4A(2 to 5Pin) 2A(6 to 8Pin) 1.5A(9 to 17Pin)
- **Rated Voltage** : 250V AC/DC(2 to 4Pin)
  60V AC/DC(5Pin) 30V AC/DC(6 to 8Pin)
  30V AC/DC(9 to 12Pin) 30V AC/DC(13 to 17Pin)
- **Insulation Resistance** : 10^8 Min

Ordering Information

4006 N - 04

Series No.

A:Male

Waterproof Circular Connectors (M12 Female Cable Assembly) (IP 68)

PANSTRONG

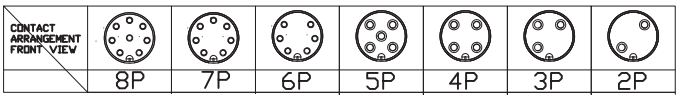

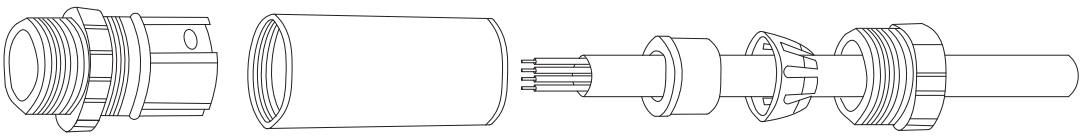

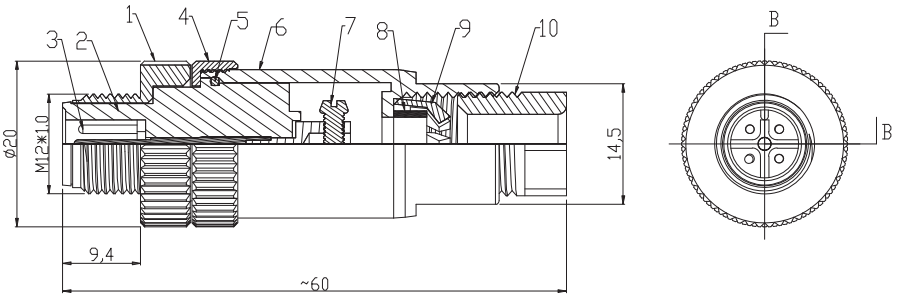

編號	產品名稱	
10	尾部螺帽	PA
9	電纜夾	PA
8	橡膠套管	NBR
7	止附螺絲	Stainless Steel
6	外殼	PA
5	橡膠圈	NBR
4	連接螺帽	Brass
3	Pin	Brass
2	Housing	PBT
1	公頭接頭	Zinc

Materials

- **Waterproof Rate** : IP68
- **Current Rating** : 4A(2 to 5Pin) 2A(6 to 8Pin)
- **Rated Voltage** : 250V AC/DC(2 to 4Pin)
  60V AC/DC(5Pin)
  30V AC/DC(6 to 8Pin)
- **Insulation Resistance** : 10^8 Min

PASS RoHS

Ordering Information

4006CF □

3=3Pins 7=7Pins
4=4Pins 8=8Pins
5=5Pins

Waterproof Circular Connectors (M12 Male Cable Assembly) (IP 68)

PANSTRONG

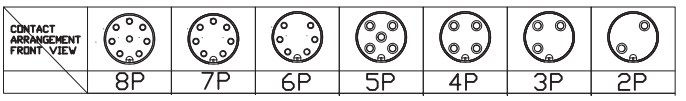

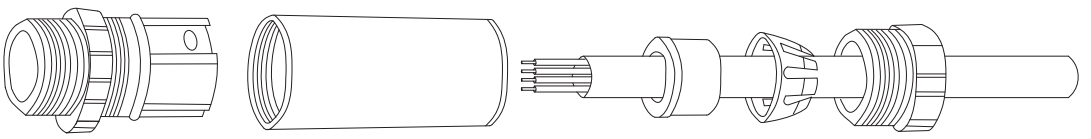

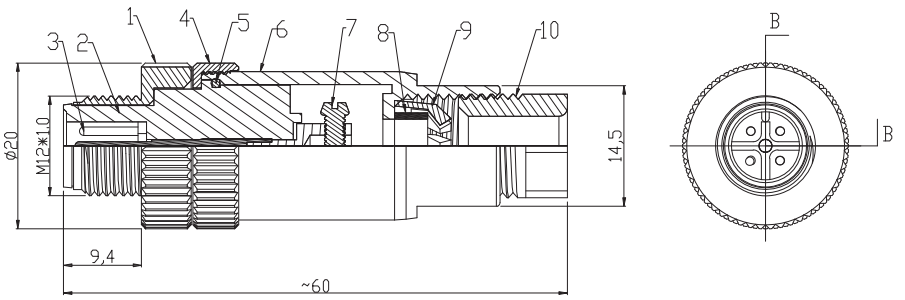

編號	產品名稱	
10	尾部螺帽	PA
9	電纜夾	PA
8	橡膠套管	NBR
7	止附螺絲	Stainless Steel
6	外殼	PA
5	橡膠圈	NBR
4	連接螺帽	Brass
3	Pin	Brass
2	Housing	PBT
1	公頭接頭	Zinc

Materials

- **Waterproof Rate** : IP68
- **Current Rating** : 4A(2 to 5Pin) 2A(6 to 8Pin)
- **Rated Voltage** : 250V AC/DC(2 to 4Pin)
  60V AC/DC(5Pin)
  30V AC/DC(6 to 8Pin)
- **Insulation Resistance** : 10^8 Min

PASS RoHS

Ordering Information

4006CM □

3=3Pins 7=7Pins
4=4Pins 8=8Pins
5=5Pins

Waterproof M12 Cap (IP 68)

PANSTRONG

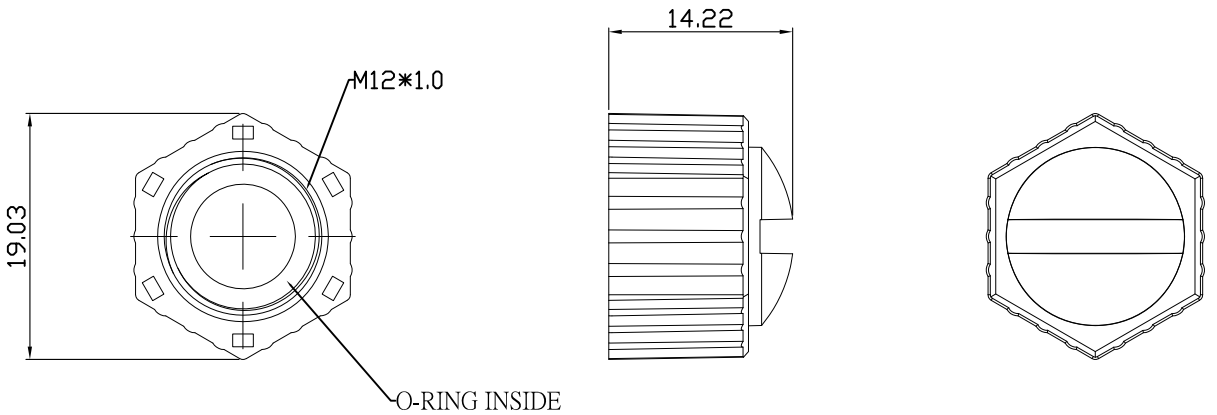

M12 Male Cap

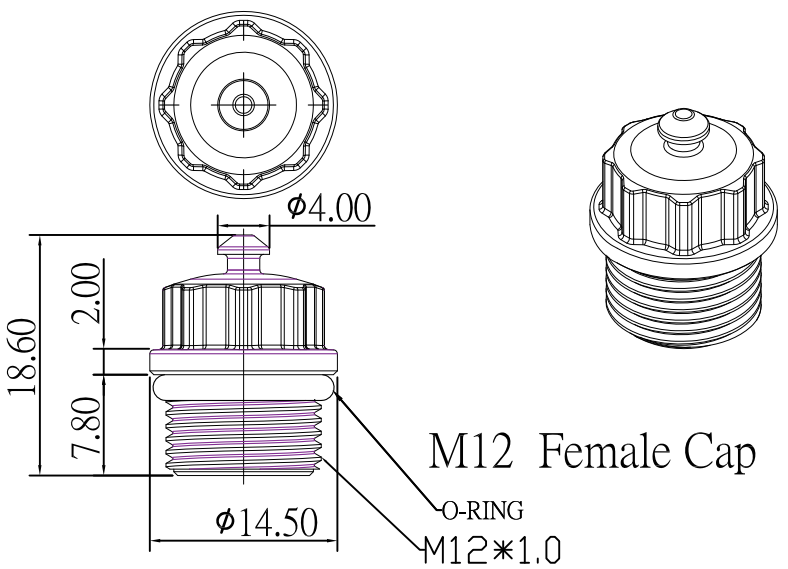

M12 Female Cap

Materials

- **Plastic Housing：** Engineering Thermoplastic.

RoHS PASS

Ordering Information

4001A-01 (M12 Male Cap)
4001A-02 (M12 Female Cap)

Waterproof M8 Male With PG9 Front Mount (IP 68)

PANSTRONG

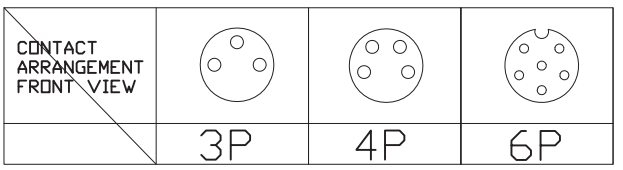

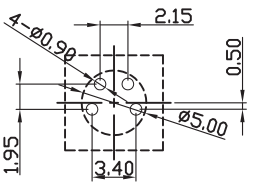

PCB Cut-out

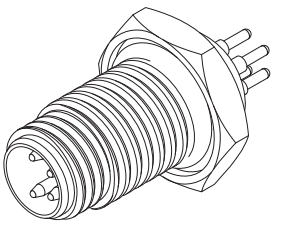

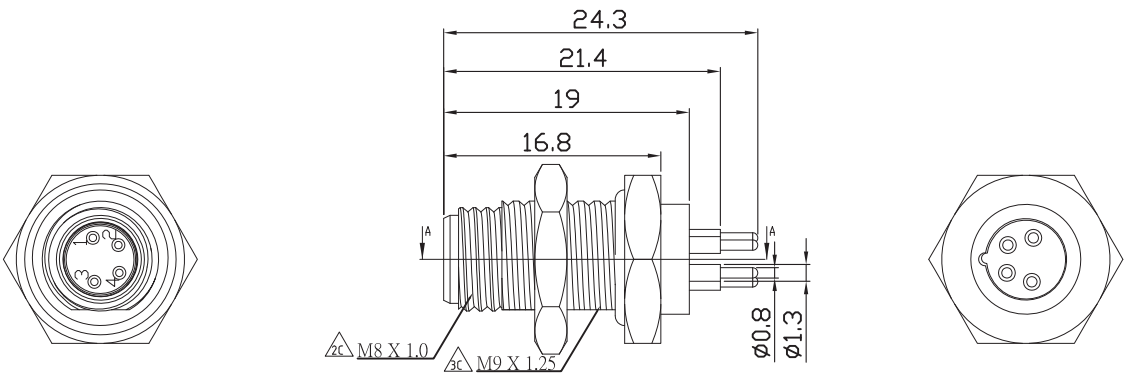

Materials

- **Plastic Housing** : Engineering Thermoplastic Flammability Rating UL 94V-0.
- **Contacts** : Copper Alloy.
- **Plating** : Gold Plating Over Nickel In Contact.
- **O-Ring** : Silicone Rubber Black Color.
- **Shielded** : Brass With Nickel Plated.

PASS RoHS

Ratings and Characteristics

- **Waterproof Rate** : IP68
- **Current Rating** : 3A(3Pin)
  3A(4Pin) 1.5A(6Pin)
- **Rated Voltage** : 50V AC/60V DC(3Pin) 50V AC/60V DC(4Pin)
  30V AC/30V DC(6Pin)
- **Insulation Resistance** : 10^8 Min

Ordering Information

4012 A □

- Series No.
- Male Panel mount:PG9
- 3:3Pin 4:4Pin 6:6Pin

Waterproof M8 Male Front Mount With Wire Harness or Cable Assembly (IP 68)

PANSTRONG

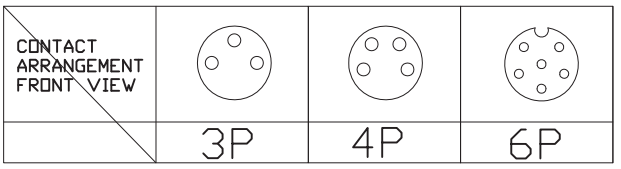

P1	WIRE COLOR	P2
1	GREEN	2
3	RED	3
4	BLACK	1

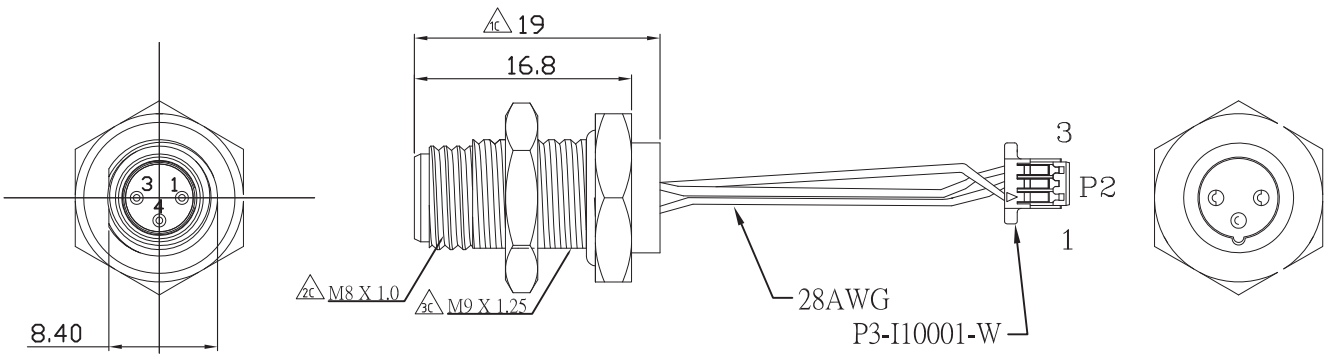

Materials

- **Plastic Housing** : Engineering Thermoplastic Flammability Rating UL 94V-0.
- **Contacts** : Copper Alloy.
- **Plating** : Gold Plating Over Nickel In Contact.
- **O-Ring** : Silicone Rubber Black Color.
- **Shield** : Brass With Nickel Plated.

PASS RoHS

Ratings and Characteristics

- **Waterproof Rate** : IP68
- **Current Rating** : 3A(3Pin)
  3A(4Pin) 1.5A(6Pin)
- **Rated Voltage** : 50V AC/60V DC(3Pin) 50V AC/60V DC(4Pin)
  30V AC/30V DC(6Pin)
- **Insulation Resistance** : 10^8 Min

Ordering Information

4012A □ W □

- 4012A: Series No.
- □: 3:3Pin, 4:4Pin, 6:6Pin
- W: C=Cable Assembly, W=Wire Harness, S=For Wire Solder
- □: Description: Connector Type, Wire length .....

Waterproof M8 Male Front Mount Cable Assembly for Automotive (IP 68)

PANSTRONG

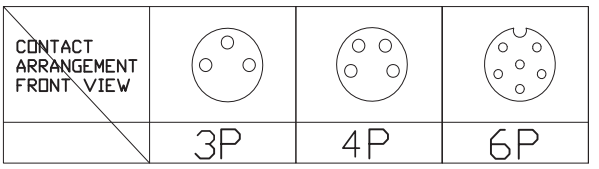

P1	WIRE COLOR
1	RED
3	BLACK

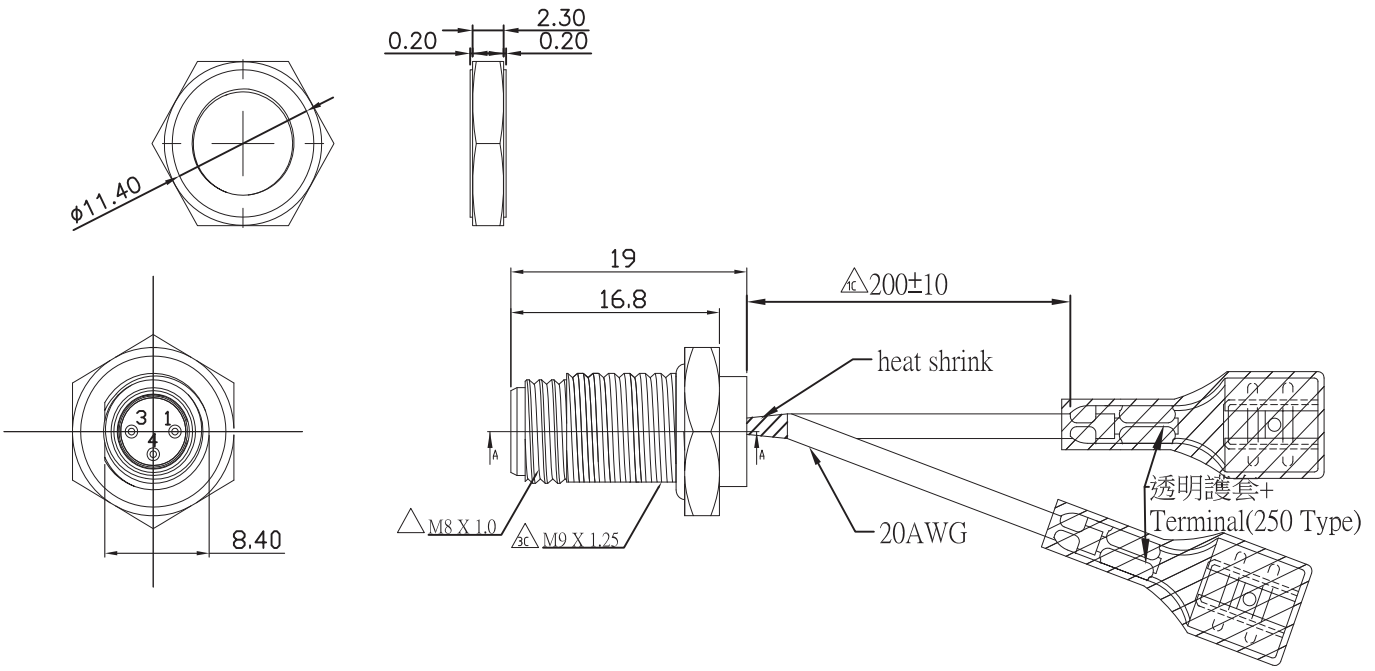

Materials

- **Plastic Housing** : Engineering Thermoplastic Flammability Rating UL 94V-0.
- **Contacts** : Copper Alloy.
- **Plating** : Gold Plating Over Nickel In Contact.
- **O-Ring** : Silicone Rubber Black Color.
- **Shield** : Brass With Nickel Plated.

PASS RoHS

Ratings and Characteristics

- **Waterproof Rate** : IP68
- **Current Rating** : 3A(3Pin)
  3A(4Pin) 1.5A(6Pin)
- **Rated Voltage** : 50V AC/60V DC(3Pin) 50V AC/60V DC(4Pin)
  30V AC/30V DC(6Pin)
- **Insulation Resistance** : 10^8 Min

Ordering Information

Waterproof M8 Male Front Mount fov USB Cable Assembly (IP 68)

PANSTRONG

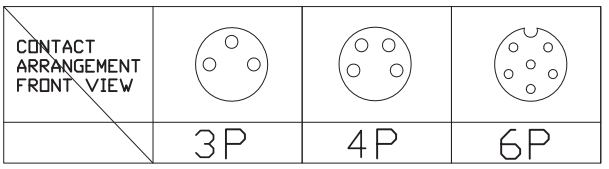

P1	WIRE COLOR	P2
1	BLACK	2
2	WHITE	4
3	GREEN	3
4	RED	5
SHILDED	BLACK	1

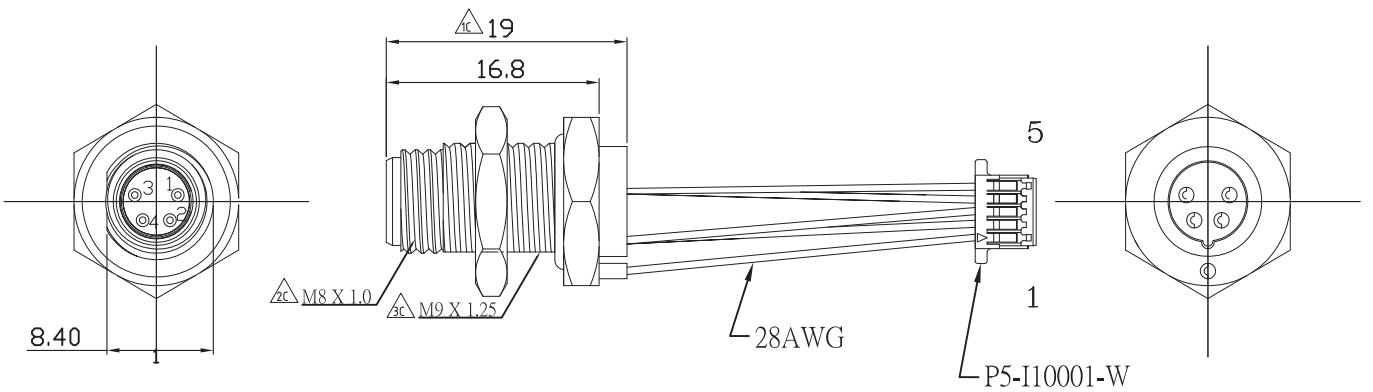

Materials

- **Plastic Housing** : Engineering Thermoplastic Flammability Rating UL 94V-0.
- **Contacts** : Copper Alloy.
- **Plating** : Gold Plating Over Nickel In Contact.
- **O-Ring** : Silicone Rubber Black Color.
- **Shield** : Brass With Nickel Plated.

PASS RoHS

Ratings and Characteristics

- **Waterproof Rate** : IP68
- **Current Rating** : 3A(3Pin)
  3A(4Pin) 1.5A(6Pin)
- **Rated Voltage** : 50V AC/60V DC(3Pin) 50V AC/60V DC(4Pin)
  30V AC/30V DC(6Pin)
- **Insulation Resistance** : 10^8 Min

Ordering Information

4012A41001

Waterproof M8 Male With Cable (IP 68)

PANSTRONG

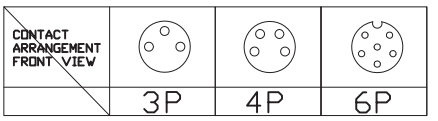

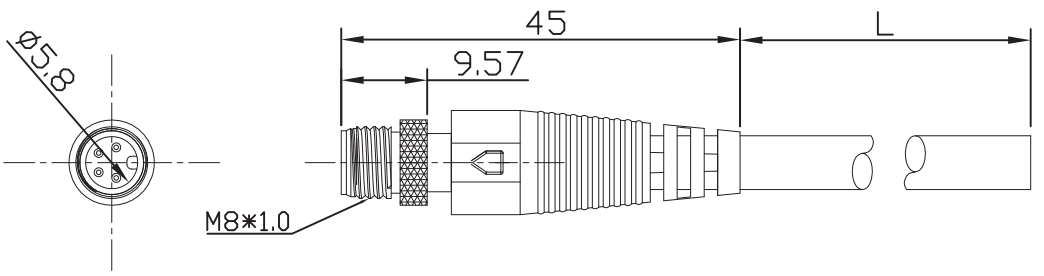

Materials

- **Materlais :**
- **Plastic Housing :** Engineering Thermoplastic
  Flammability Rating UL 94V-0.
- **Contacts** : Copper Alloy.
- **Plating** : Gold Plating Over Nickel In Contact.
- **O-Ring** : Silicone Rubber Black Color.
- **Coupling Nut** : M8*1 Brass With Nickel Plated
- **Cable** : UL2464 22AWG,OD5.4mm,Color Black

PASS PASS PASS PASS PASS PASS PASS PASS RoHS

Ratings and Characteristics

- **Waterproof Rate** : IP68
- **Current Rating** : 3A(3Pin)
  3A(4Pin) 1.5A(6Pin)
- **Rated Voltage** : 50V AC/60V DC(3Pin) 50V AC/60V DC(4Pin)
  30V AC/30V DC(6Pin)
- **Insulation Resistance** : 10^8 Min

Ordering Information

4016 A □ □

- Series No.
- A:Male
- 3:3Pin
  4:4Pin
  6:6Pin
- Description:
  Connector Type
  Wire length
  .....

Waterproof M8 Female With Cable (IP 68)

PANSTRONG

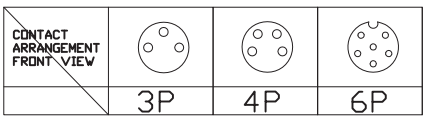

P1	WIRE COLOR
1	BLACK
2	WHITE
3	GREEN
4	RED
SHILDED	BLACK

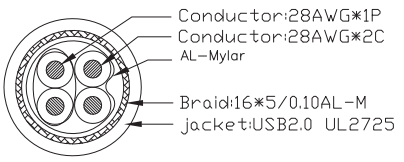

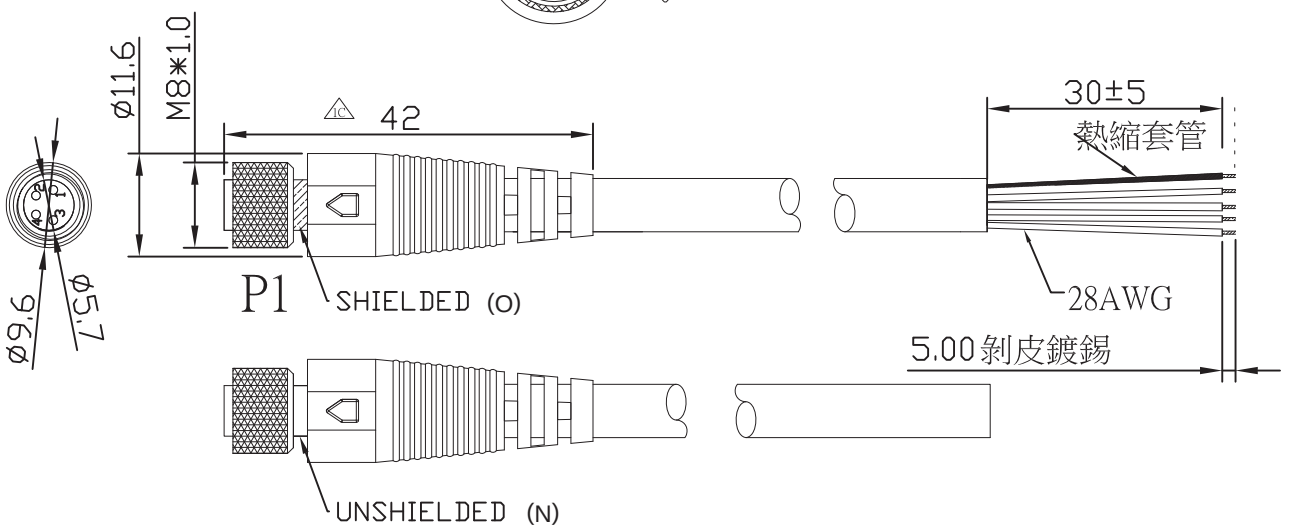

Materials

- **Plastic Housing** : Engineering Thermoplastic Flammability Rating UL 94V-0.
- **Contacts** : Copper Alloy.
- **Plating** : Gold Plating Over Nickel In Contact.
- **O-Ring** : Silicone Rubber Black Color.
- **Cable** : UL2464 22AWG,OD5.4mm,Color Black

PASS RoHS

Ratings and Characteristics

- **Waterproof Rate** : IP68
- **Current Rating** : 3A(3Pin) 3A(4Pin) 1.5A(6Pin)
- **Rated Voltage** : 50V AC/60V DC(3Pin) 50V AC/60V DC(4Pin) 30V AC/30V DC(6Pin)
- **Insulation Resistance** : 10^8 Min

Ordering Information

4016 N □ □

- Series No.
- N:Female O:Female shielded
- 3:3Pin 4:4Pin 6:6Pin
- Description: Connector Type Wire length .....

Waterproof Circular Connectors (M8 Male Cable Assembly) (IP 68)

PANSTRONG

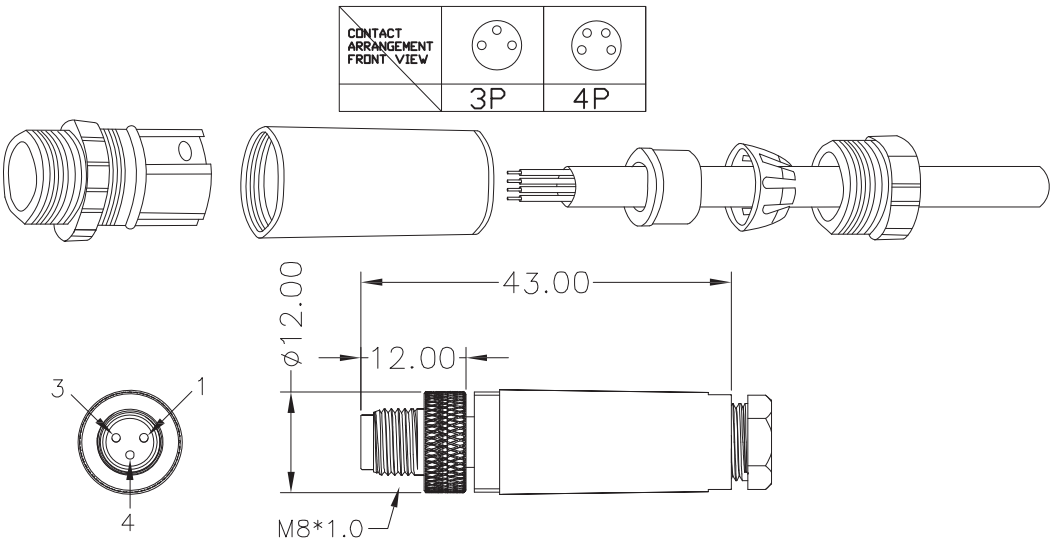

編號	產品名稱	
10	尾部螺帽	PA
9	電纜夾	PA
8	橡膠套管	Silicon
7	止附螺絲	Stainless Steel
6	壓接槽	Brass
5	橡膠圈	NBR
4	Body	PA
3	Male Pin	Brass
2	Housing	PA
1	外套	Brass

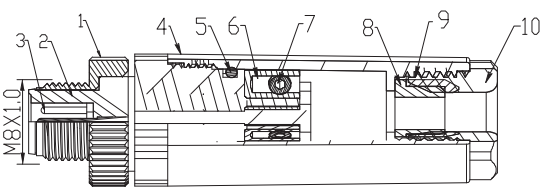

Materials

- **Waterproof Rate** : IP68
- **Current Rating** : 3A(3Pin)
  3A(4Pin)
- **Rated Voltage** : 60V AC/ DC(3Pin)
  30V AC/ DC(4Pin)
- **Insulation Resistance** : 10^8 Min

PASS RoHS

Ordering Information

4016CM □

3:3Pin
4:4Pin

Waterproof Circular Connectors (M8 Female Cable Assembly) (IP 68)

PANSTRONG

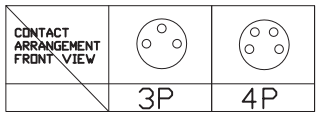

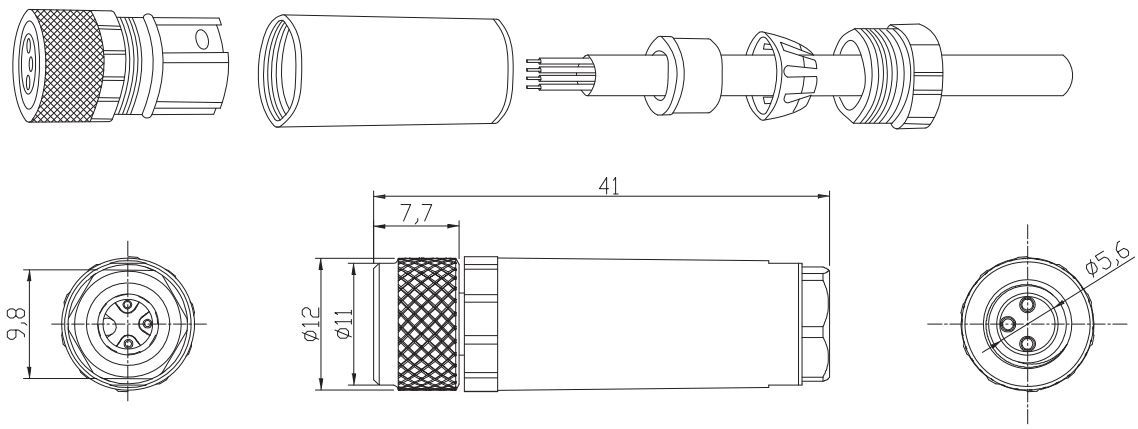

編號	產品名稱	
11	o-ring	NBR
10	尾部螺帽	PA
9	電纜夾	PA
8	橡膠套管	Silicon
7	止附螺絲	Stainless Steel
6	壓接槽	Brass
5	橡膠圈	NBR
4	Body	PA
3	Female Pin	Brass
2	Housing	PA
1	外套	Brass

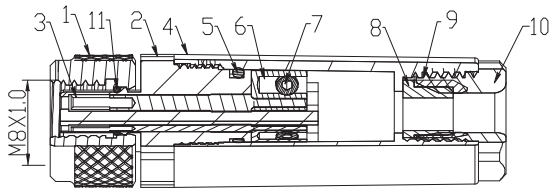

Materials

- **Waterproof Rate** : IP68
- **Current Rating** : 3A(3Pin)
  3A(4Pin)
- **Rated Voltage** : 60V AC/ DC(3Pin)
  30V AC/ DC(4Pin)
- **Insulation Resistance** : 10^8 Min

PASS RoHS

Ordering Information

4016CF □

3:3Pin
4:4Pin

Waterproof Circular Connectors (M8 Male Cable Assembly) (IP 68)

PANSTRONG

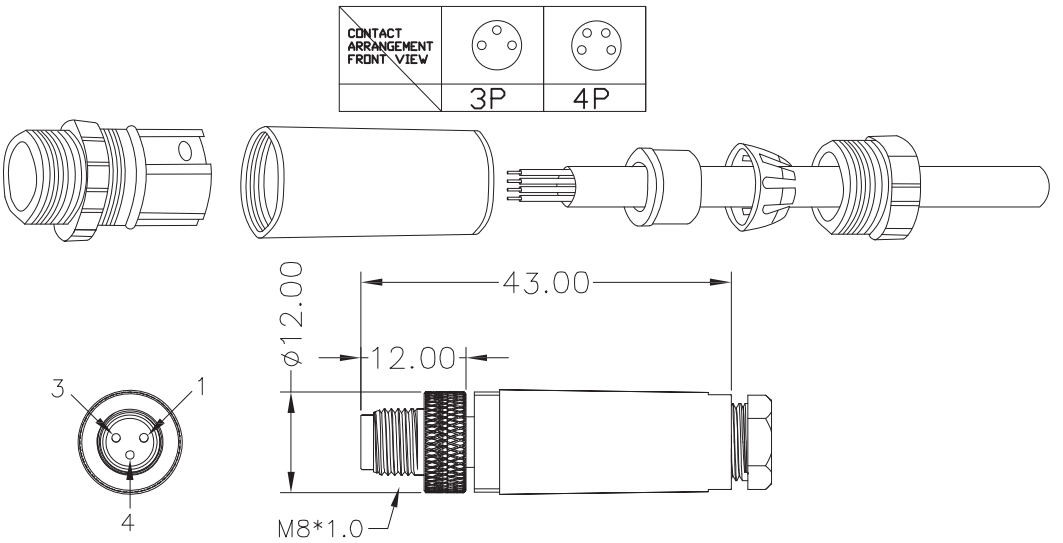

編號	產品名稱	
10	尾部螺帽	PA
9	電纜夾	PA
8	橡膠套管	Silicon
7	止附螺絲	Stainless Steel
6	壓接槽	Brass
5	橡膠圈	NBR
4	Body	PA
3	Male Pin	Brass
2	Housing	PA
1	外套	Brass

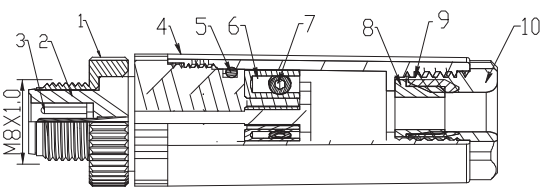

Materials

- **Waterproof Rate** : IP68
- **Current Rating** : 3A(3Pin)
  3A(4Pin)
- **Rated Voltage** : 60V AC/ DC(3Pin)
  30V AC/ DC(4Pin)
- **Insulation Resistance** : 10^8 Min

PASS RoHS

Ordering Information

4016CM □

3:3Pin
4:4Pin

Waterproof M8 Cap (IP 68)

PANSTRONG

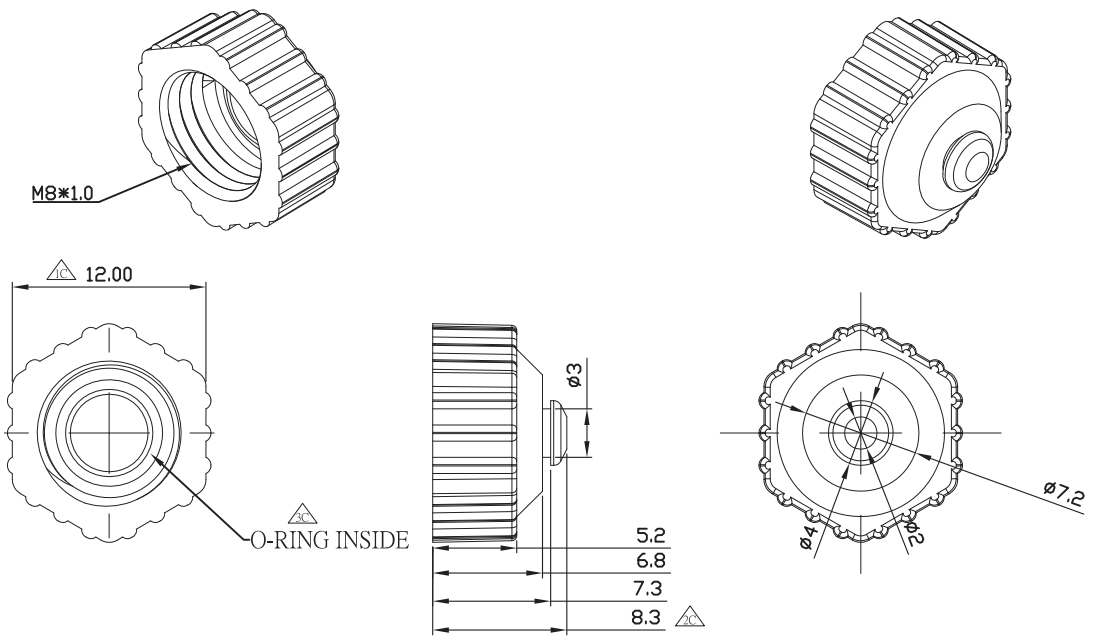

Materials

- **Plastic Housing：** Engineering Thermoplastic.

Ordering Information

4012A-01 (M8 Male Cap)

Cable Gland (IP 68)

PANSTRONG

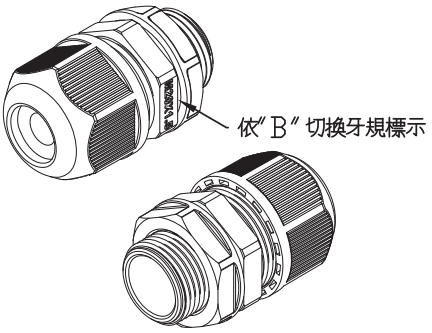

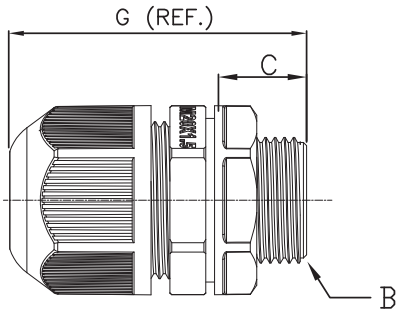

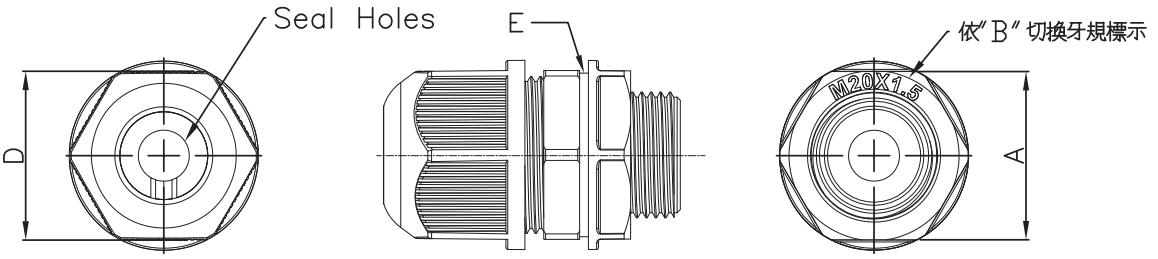

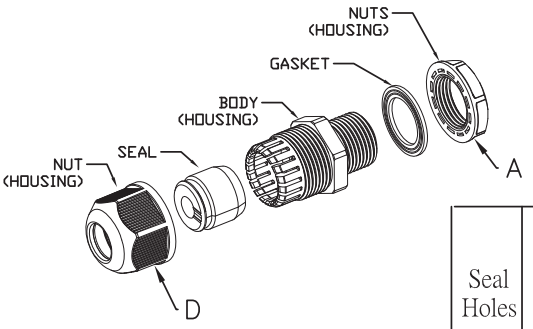

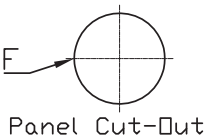

Seal Holes	Thread B	Thread Length C	Cable Range ø	Spanner Size A / D	Panel Thick (Max.) E	Panel Mounting Hole F	Total Length G (REF.)
1	M16x1.5P	15	4.0~7.0	22 / 22	5.50	16~16.3	41.45(REF.)
1	M20x1.5P	16	4.0~8.0	27 / 27	6.50	20~20.3	49.30(REF.)
1	M25x1.5P	10	4.0~8.0	33 / 27	1.50	25~25.4	41.00(REF.)

Materials

- **Mechanical :**
- **Housing** : Engineering Thermoplastic
  Flammability Rating UL 94V-2. (UL94V-0)
- **Seal & Gasket** : Silicone.
- **Operating Temperature :** -40• ~150•

PASS PASS PASS PASS PASS PASS PASS PASS RoHS

Ordering Information

4301 - Series

Series No.

- **Other than Standard Series are available**

Vent Plug (IP 68)

PANSTRONG

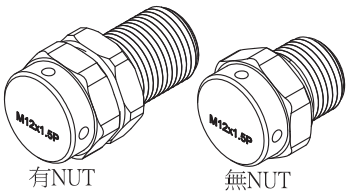

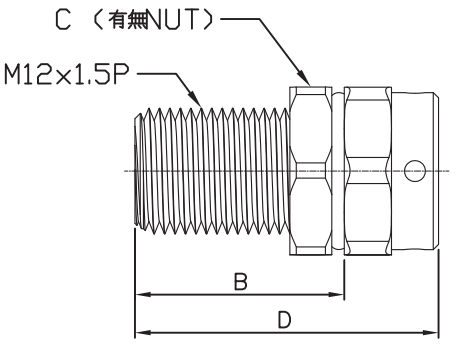

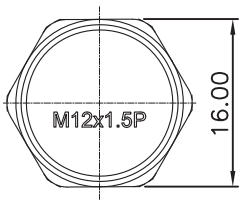

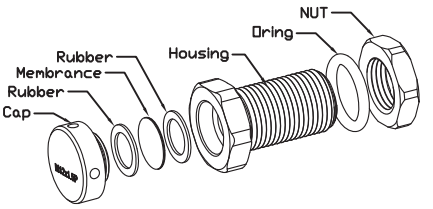

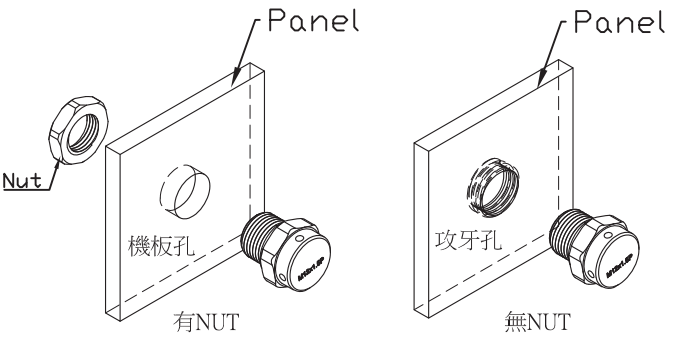

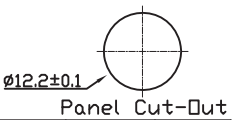

Thread A	Thread Length B	Nut C	Total Length D	Wrench	Panel Thick (Max.)
M12x1.5P	10	YES	19	16	4.0
M12x1.5P	10	No	20	16	8.0
M12x1.5P	20	YES	29	16	15.0

Materials

Mechanical :

- **Housing :** Brass With Nickel.
- **Cap :** Brass With Nickel.
- **Nut :** Brass With Nickel.
- **Membrance :** PTFE.
- **Rubber :** Silicone.
- **O-Ring :** EPDM.
- **Operating Temperature :** -40• ~150•
- **Air Permeability :** 1061 ml/cm2/min(@1 Psi)

PASS RoHS

Ordering Information

4380 - Series

Series No.

Other than Standard Series are available

Panstrong Company Ltd.

22F-8, No.99, Sec.1, Shin Tai Wu Rd., Shi-Chi City, Taipei Hsien, Taiwan, R.O.C.
Tel No.:886-2-26971001 Fax No.:886-2-26971727
Web Site:www.panstrong.com.tw E-mail:info@panstrong.com.tw