REV	DESCRIPTION	DATE
A	Initial Release	06.06.15

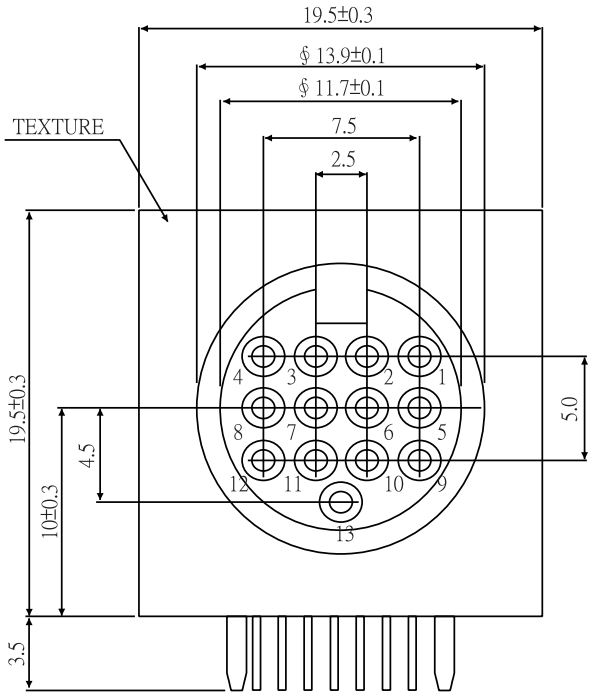

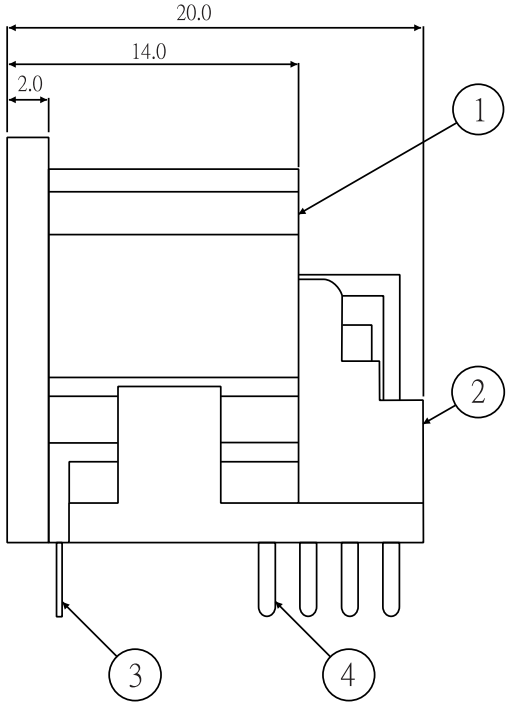

TYPE B

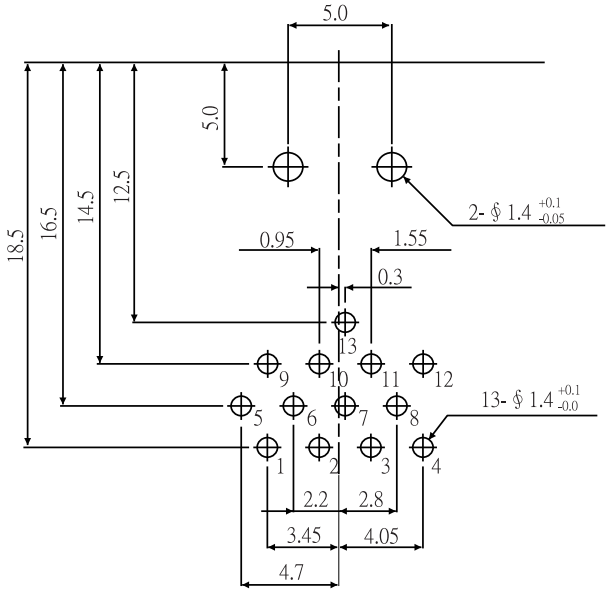

TYPE A

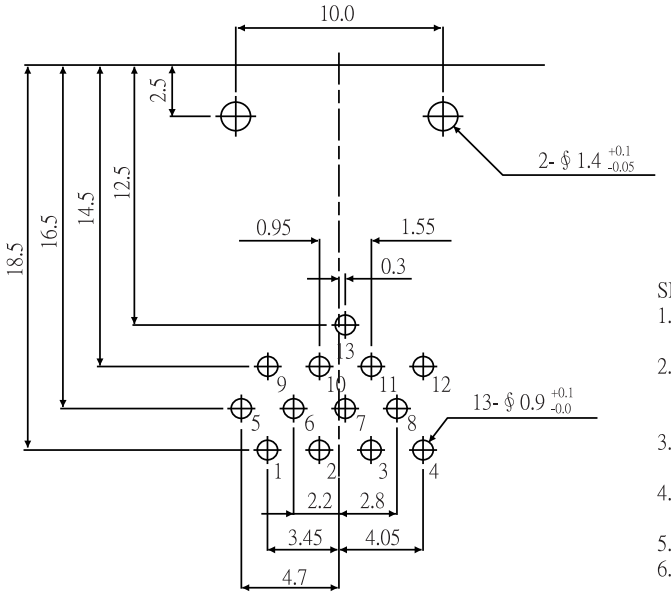

Unspecified Tolerance

P/N	PART NAME	Q'TY	MATERIAL	PLATING	REMARKS
4	CONTACT TERMINAL	13	PBSR-H 0.2t	SILVER PLATED	
3	EARTH TERMINAL	1	PBSR-H 0.25t	TIN	
2	COVER	1	P.B.T.		UL94V-0
1	BODY	1	P.B.T.		UL94V-0

SPECIFICATIONS:
1. CURRENT RATING: AC: 100V 1A
   DC: 12V 2A
2. CONTACT RESISTANCE: 100m OHM MAX (AFTRER 1,000 CYCLES INSERTION/ EXTRACTION)
3. DIELECTRIC WITHSTANDING VOLTAGE: 500V AC FOR 1 MINUTE.
4. INSULATION RESISTANCE: 1000M OHM MIN. AT 500V DC APPLIED FOR 1 MINUTE.
5. INSERTION FORCE: 9KG MAX.
6. EXTRACTION FORCE: 0.5 - 0.2KG.

PANSTRONG COMPANY LTD.				DRAWN BY	TOMMY
				CHECKED	
TITLE:				APPROVED	
PART NO:	DN13F0101K00E			DRAW NO	
DRAW.BOX NO:					
SCALE	4:1	REV	A	UNIT	mm